REVISION HISTORY			
REV	REVISION COMMENT	DATE	APPROVED
B	Moved M3	07-06-2018	PDAM
C	Add 2x Ø6	29-08-2018	PDAM

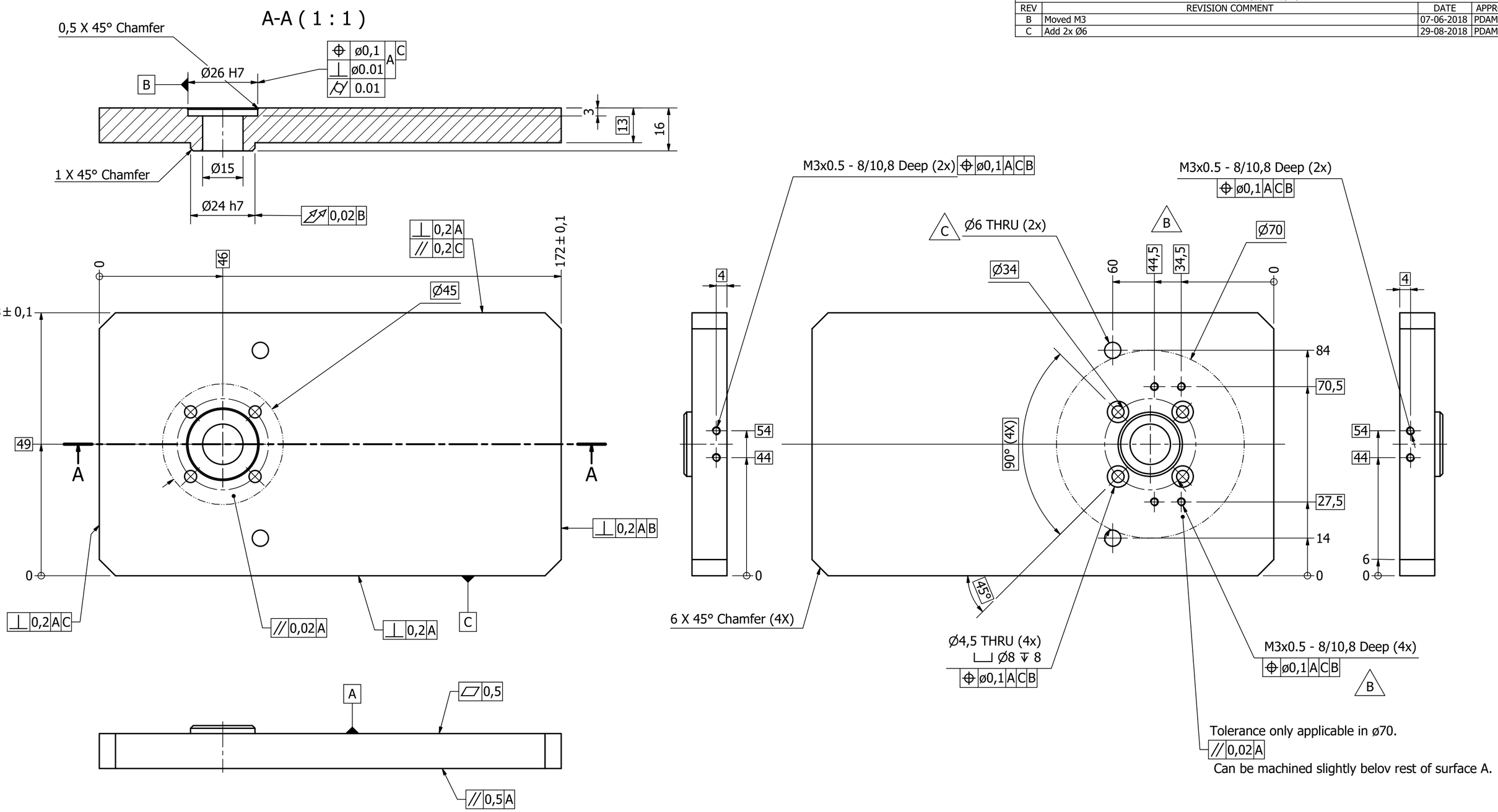

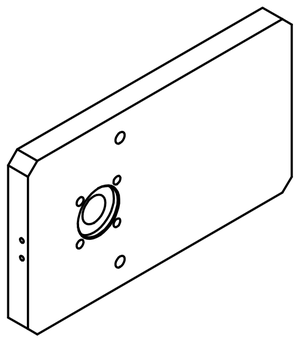

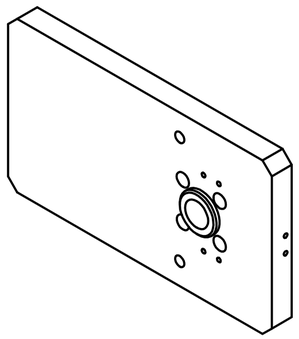

DANFYSIK

www.danfysik.com
danfysik@danfysik.dk
Phone: +45 7220 2400

Important:

This document contains informations which are the property of DANFYSIK A/S Denmark. It is submitted to you in confidence that it will not be disclosed or transmitted to others or used for manufacturing without DANFYSIK's authorization in writing.

Size: A2	Customer:	Surface machining:	Note: No sharp edges
Scale: 1 : 1	Order No.:	Surface treatment: Eloxation (Natural)	
		Material: EN AW-6082-T6	Mass: 0.6 kg
Projection:	Dimensions without tolerance indication: EN 22768 - mK	Description: Motor adaptor	
		Product No.: 7103034746	Rev.: C
	Date: / Name:	Doc. No.:	
App. by	31-08-2018 pdam		
Check by	31-08-2018 pdam	CAD Program: Inventor AIS 2016 / Plot date: File name: 7103034746.idw	Sheet: 1 of 1
Drawn by	24-03-2017 MNP		