REVISION HISTORY			
REV	REVISION COMMENT	DATE	APPROVED
A	Released		PDAM

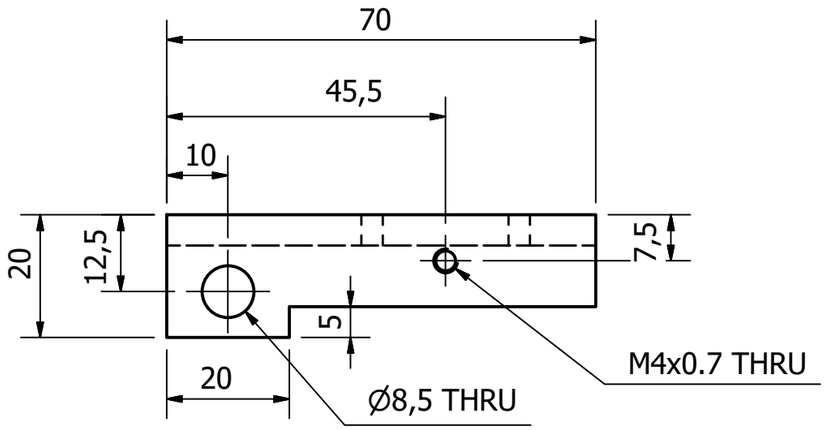

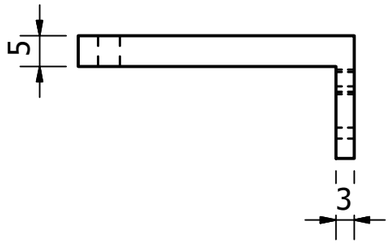

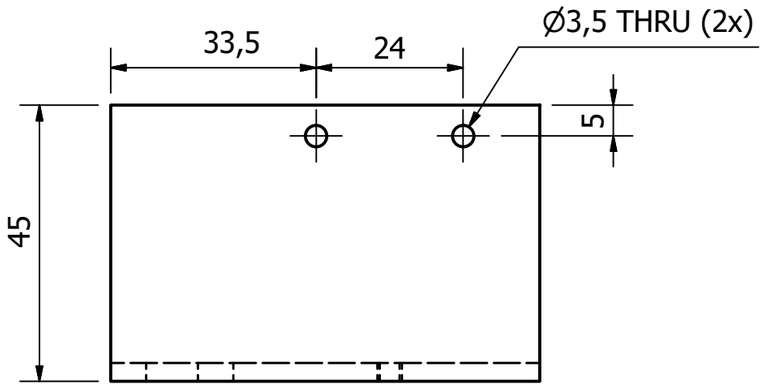

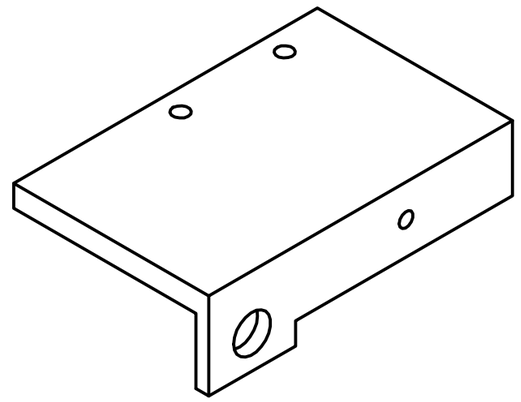

Ra 3,2

DANFYSIK
www.danfysik.com
danfysik@danfysik.dk
Phone: +45 7220 2400

Important:
This document contains informations which are the property of DANFYSIK A/S Denmark. It is submitted to you in confidence that it will not be disclosed or transmitted to others or used for manufacturing without DANFYSIK's authorization in writing.

Size: A3	Customer:	Surface machining:	Note: No sharp edges
Scale: 1 : 1	Order No.:	Surface treatment: Eloxation (Natural)	
		Material: EN AW-6082	Mass: 0.0 kg
Projection:	Dimensions without tolerance indication: ± 0,1	Description: Holder for hard stop and switch	
		Product No.: 7103036844	Rev.: A
	Date: / Name:	Doc. No.:	
App. by	07-06-2018 pdam		
Check by	07-06-2018 MNP	CAD Program: Inventor AIS 2018 / Plot date: / File name: 7103036844.idw	Sheet: 1 of 1
Drawn by	07-06-2018 PDAM		