Performance of the world's largest vertical test cryostat for SRF cavity qualification

Dr Andrew May
Accelerator Science and Technology Centre
STFC Daresbury Laboratory

SuRF Lab Team

Concept → accelerator

EM modelling of RF cavity → Manufacturing →

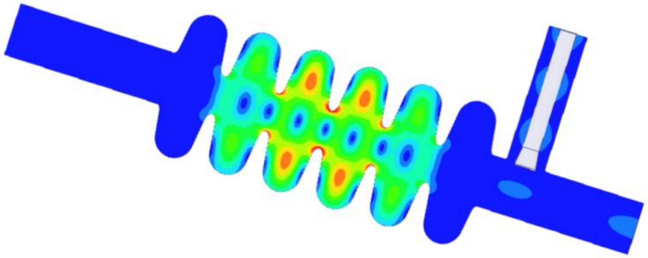

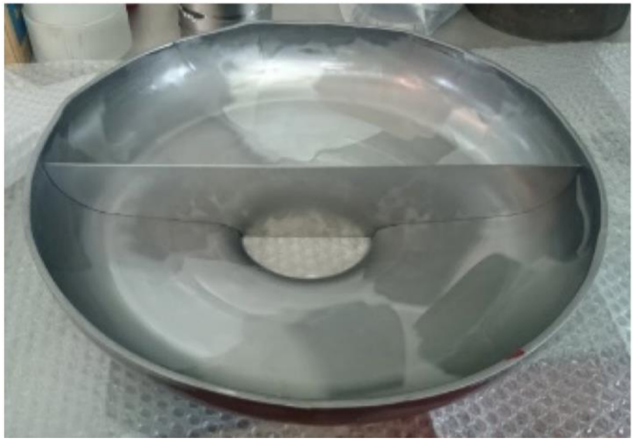

Michelato et al. (2016)

Concept → accelerator

→ Bare cavity test →

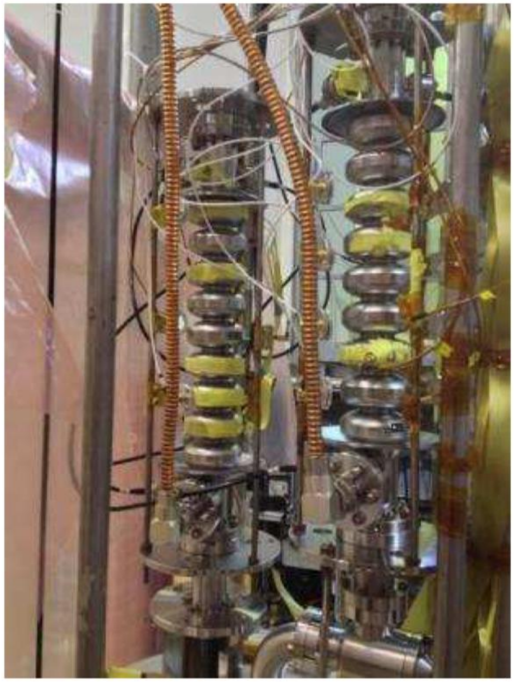

Jacketing

Sertore et al (2015)
Kako et al (2010)

ESS high-β cavities

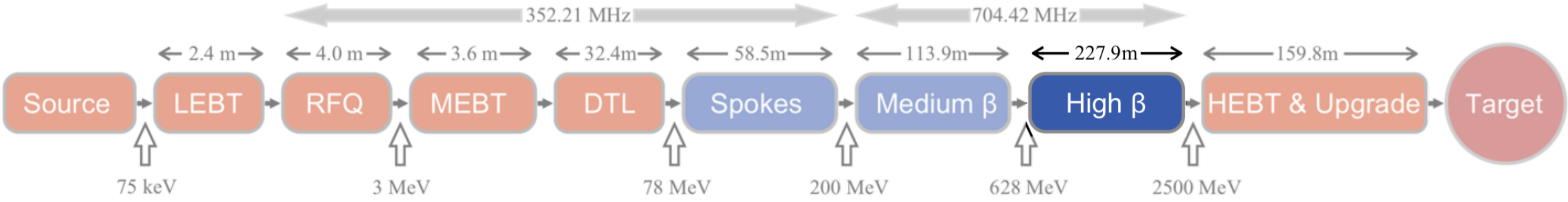

As part of the UK’s IKC to the ESS, STFC-Daresbury is responsible for the manufacture and qualification of 84 high-β SRF cavities

ESS high-β cavities

	Medium-β	**High-β**
Geometrical β	0.67	0.86
Frequency (MHz)	704.42	
No. of Cryomodules	9	21
Cavities /Cryomodule	4	4
No. of Cavities	36	**84**
Cryomodule length (m)	6.584	
Nominal Accelerating gradient (MV/m)	16.7	**19.9**
Nominal Accelerating Voltage (MV)	14.3	18.2
Q_0 at nominal gradient	**> 5e9**	

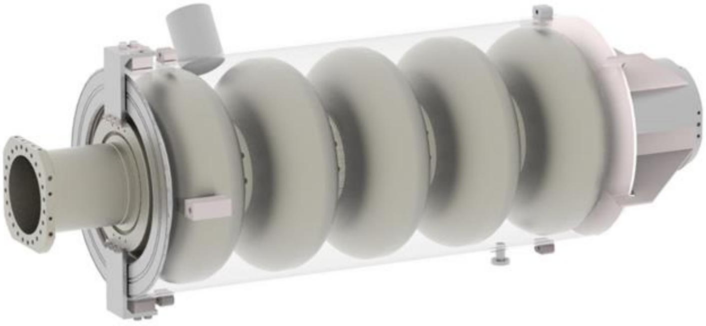

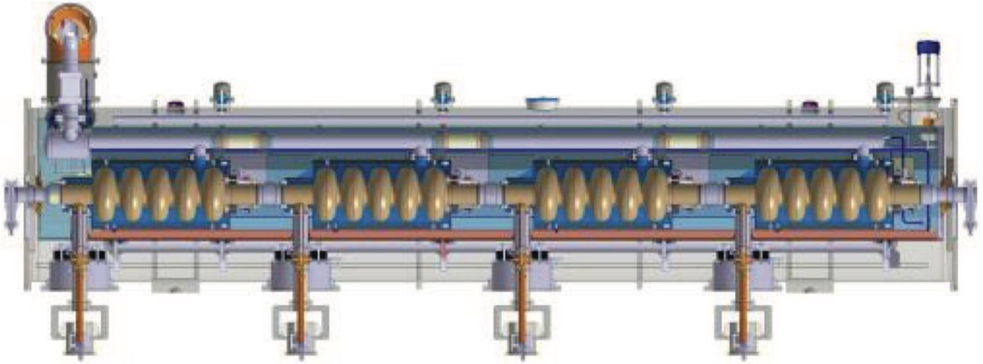

VTF key design requirements

Cavity frequency	704 MHz → dimensions
Operating temp	2 K → He-II
# cavities to test	84
Estimated retests	30%
Total anticipated tests	115
Time scale	2 years → **1 cavity/week**

Conventional VTF approach

Immerse cavities in bulk LHe bath, pump to 30 mbar (2 K), use 2 K HEX + JT valve to maintain LHe level

Used successfully at DESY, CERN, FNAL

Requires **~7500 L** LHe per test and GHe handling (2 K HEX, 2 K pumps, distribution pipework, valves, safety devices, etc.) for **20 g/s**

‘Horizontal’ VTF approach

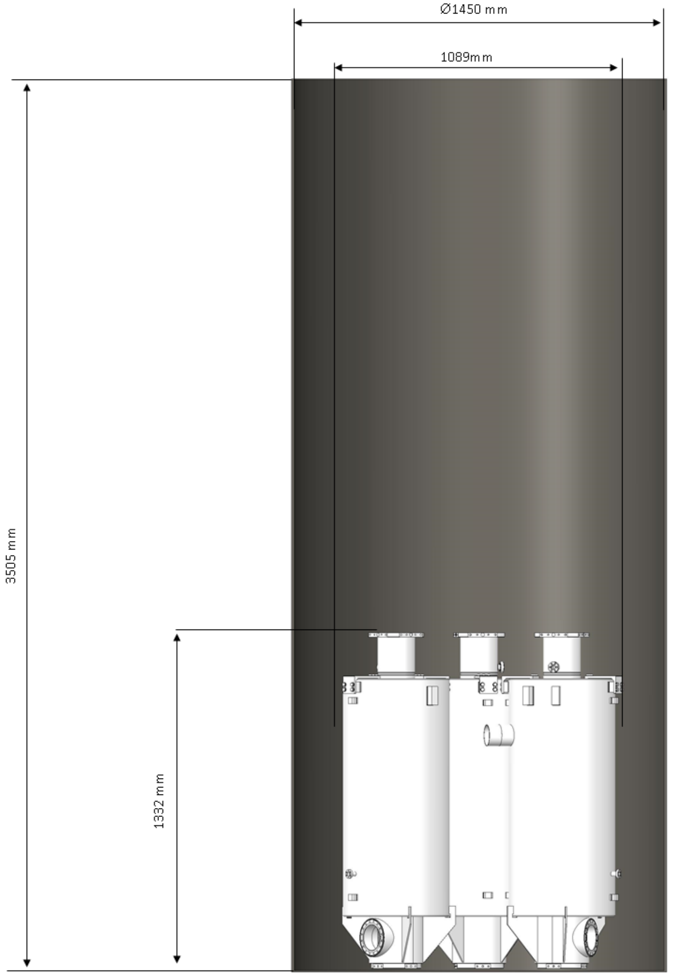

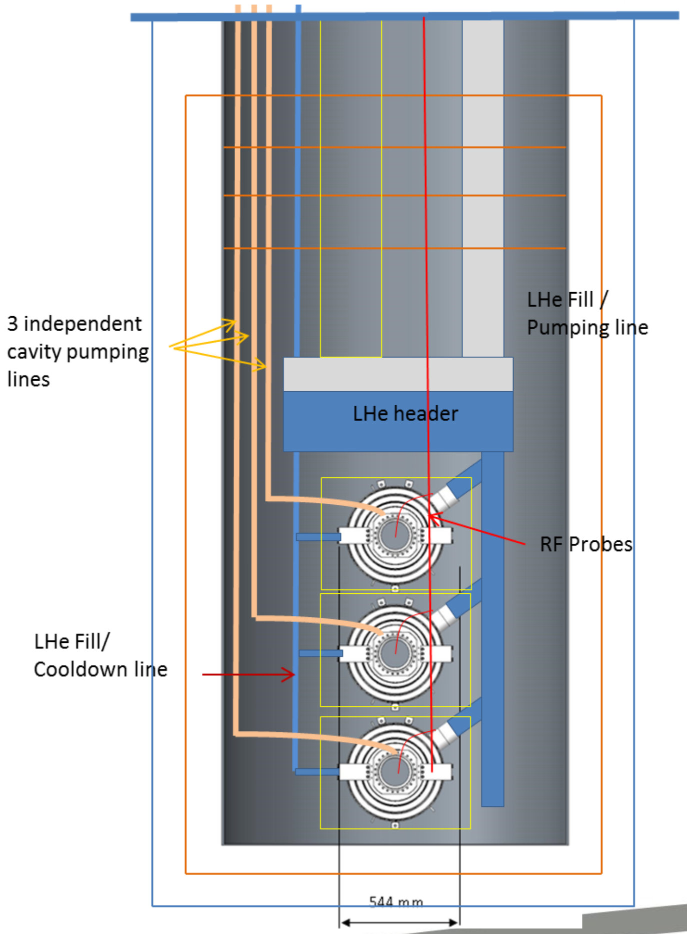
3 independent cavity pumping lines

LHe Fill / Pumping line

LHe header

RF Probes

LHe Fill/ Cooldown line

‘Horizontal’ VTF approach

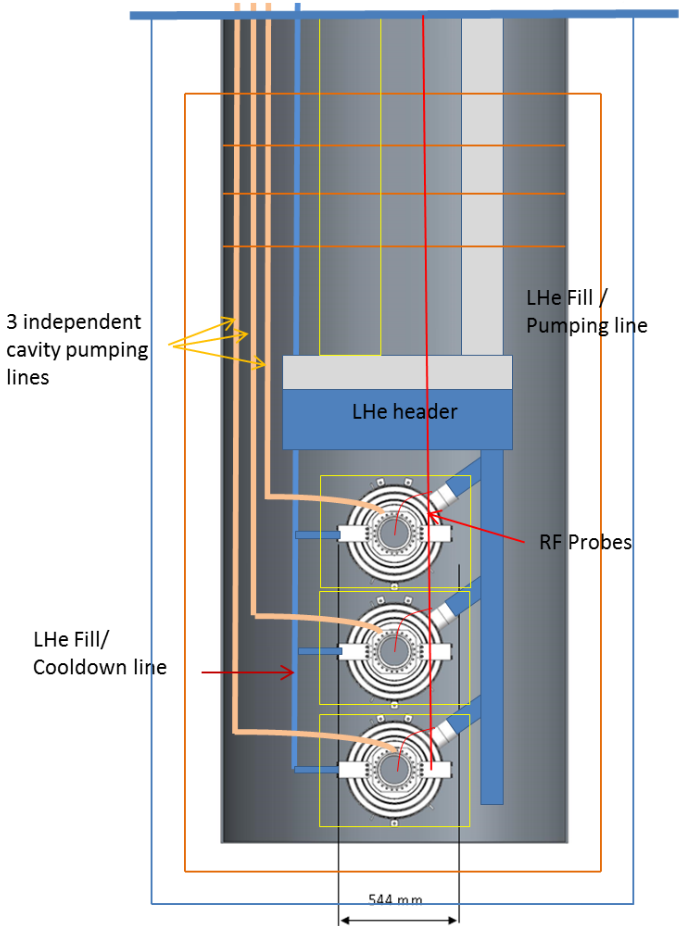

Individual LHe jackets, each ~50 L

Cryostat sized to accommodate horizontal cavity mounting (closer to configuration in linac)

3 cavities tested per cooldown

~1500 L required per test

< 2 g/s in steady state under static load

Cavity support insert design

Pair of identical CSIs with common cryostat to allow simultaneous testing and preparation of next set of cavities

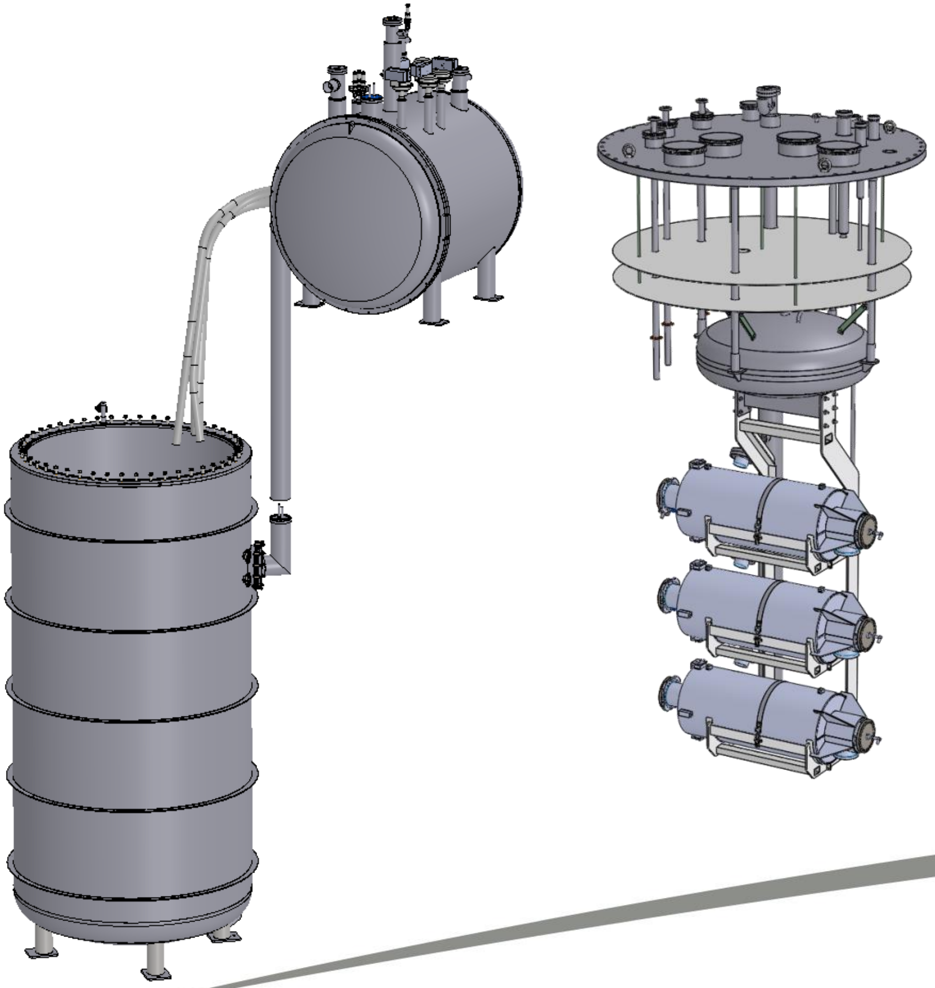

Component	Volume for 3 cavities (L)
CSI Top Header	213.0
LHe Column -Section 1 -Section 2 -Section 3	 33.4 15.2 4.4
Di-Phase Connection	23.1
Cavity-Helium Jacket	155.7
Total:	444.8

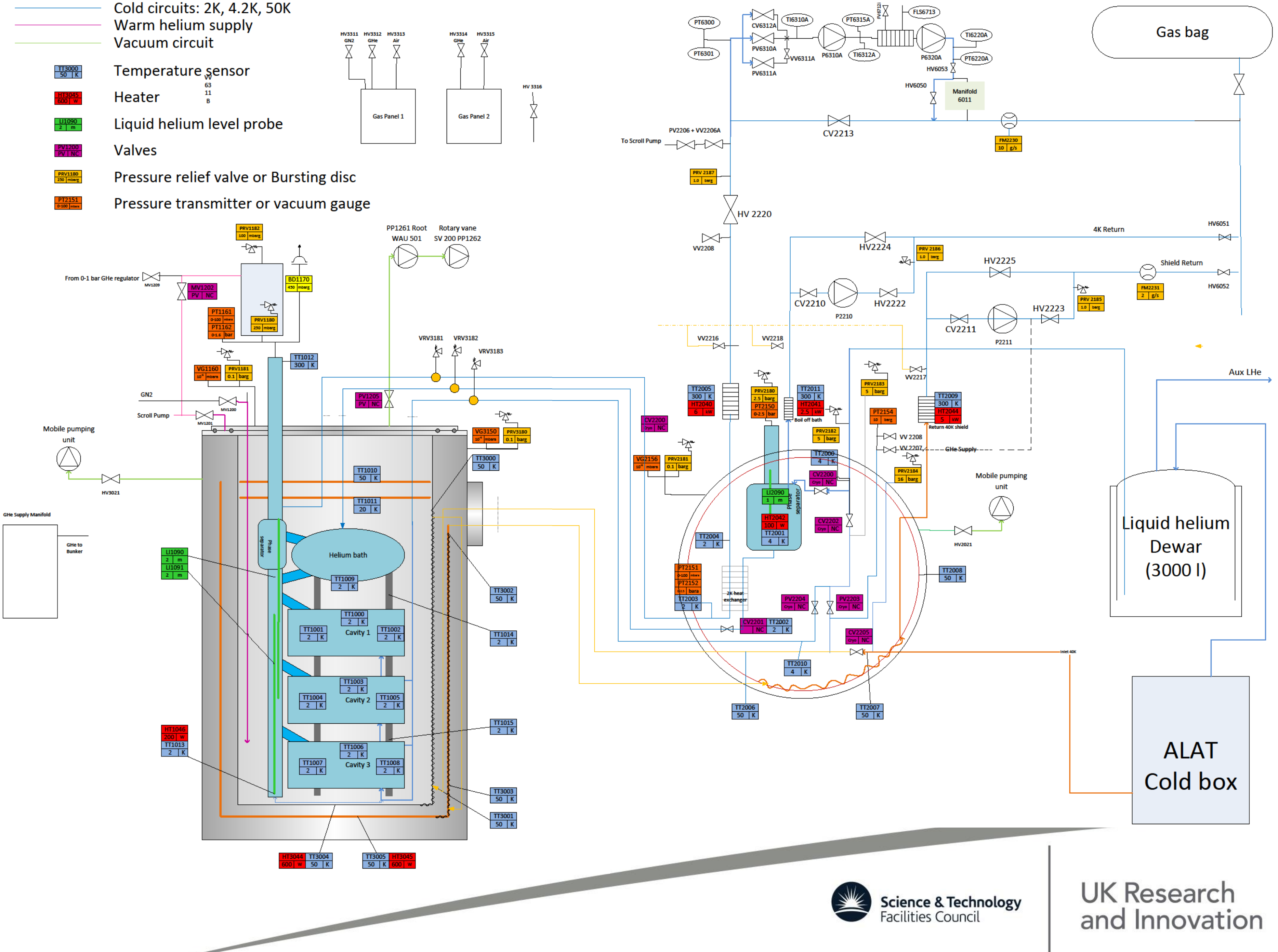

Cold circuits: 2K, 4.2K, 50K
Warm helium supply
Vacuum circuit

TT3000 50 K	Temperature sensor
HT3045 600 W	Heater
LI1090 2 m	Liquid helium level probe
PV1200 PV NC	Valves
PRV1180 250 mbarg	Pressure relief valve or Bursting disc
PT2151 0-100 mbara	Pressure transmitter or vacuum gauge

Science & Technology Facilities Council

UK Research and Innovation

SuRF Lab

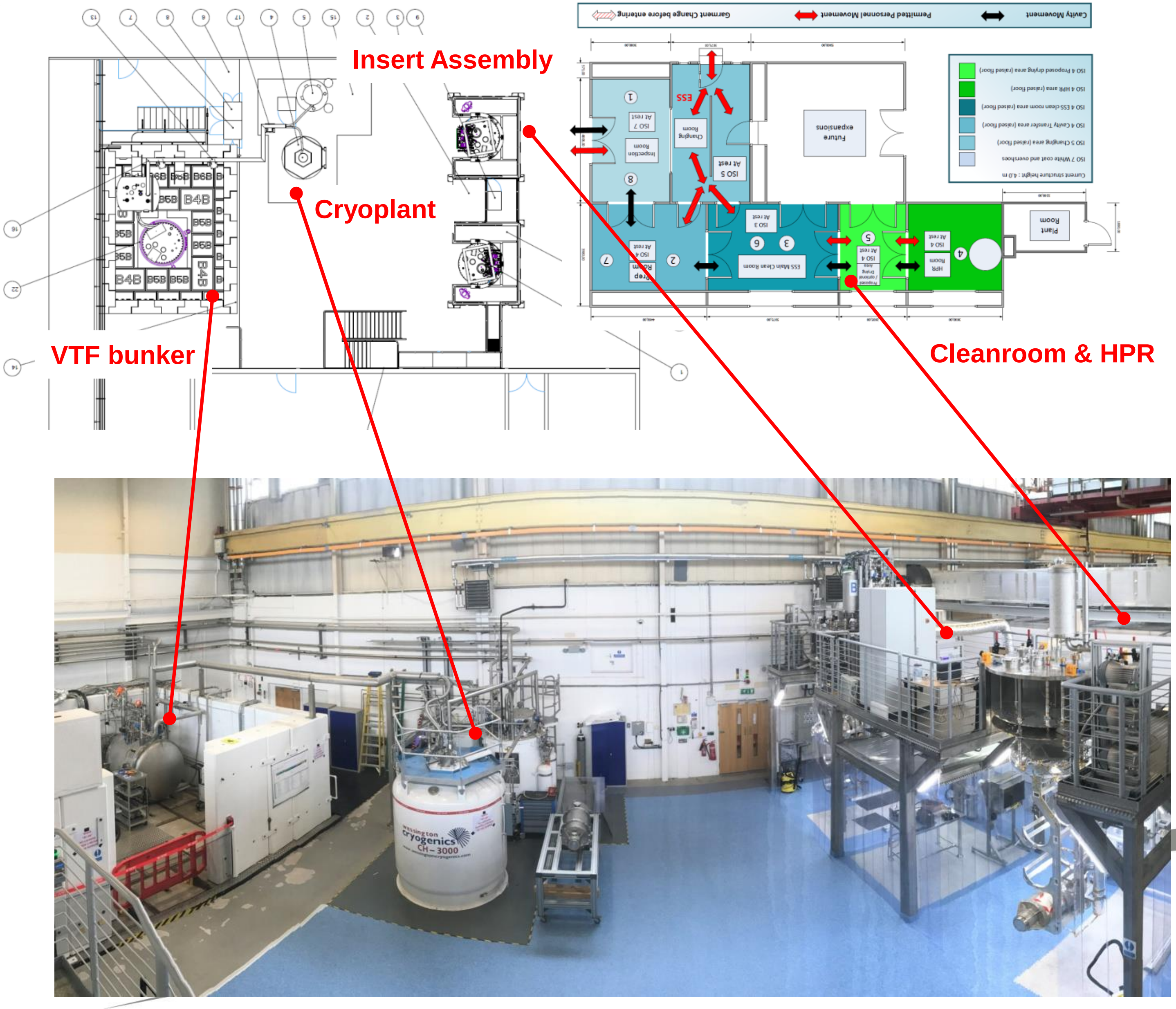

Magnetic shielding

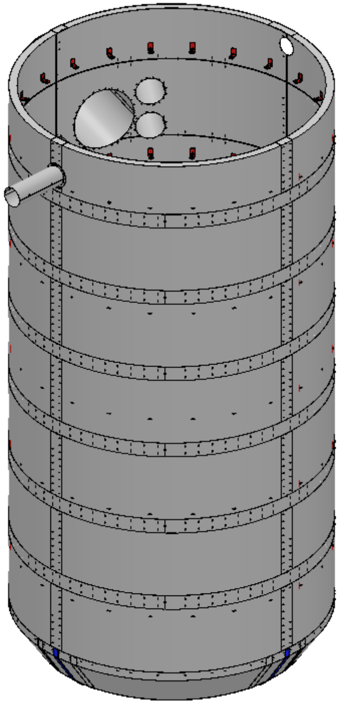

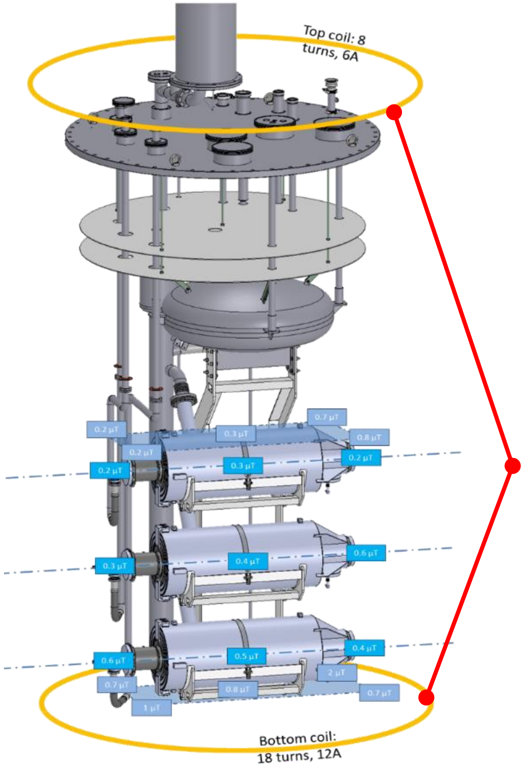

Stray field attenuation to <1.4 µT by static Mu-metal shield

Further attenuation <1.0 µT by two active coils

Modes of operation

Mode-1 Cavity assembly on CSI

Mode-2 CSI loading and initial checks

Mode-3 Shield and cavity cooldown to 40 K

Mode-4 Cavity cooldown to 4.2 K

Mode-5 RF operations at 4.2 K

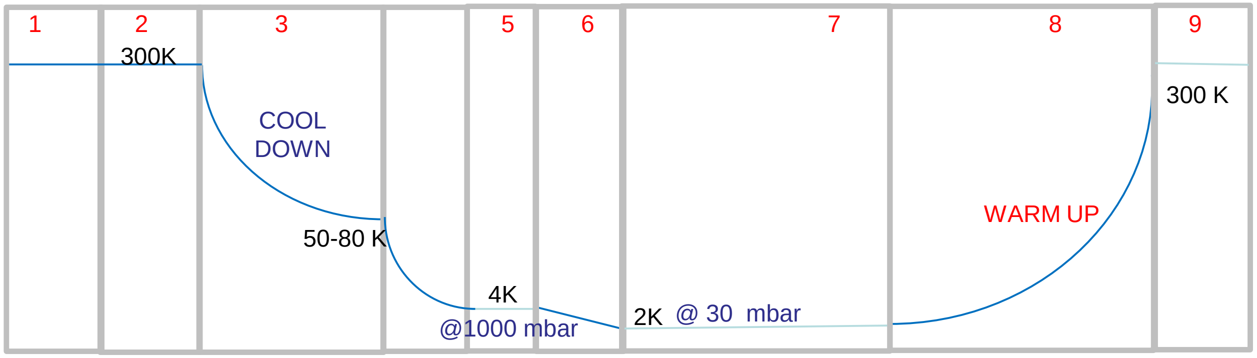

RF Operation

Modes of operation

Mode-6 Cavity cooldown to 2 K

Mode-7 RF operations at 2 K

Mode-8 Warmup to 300 K

Mode-9 CSI removal

Mode-10 Cavity disassembly on CSI

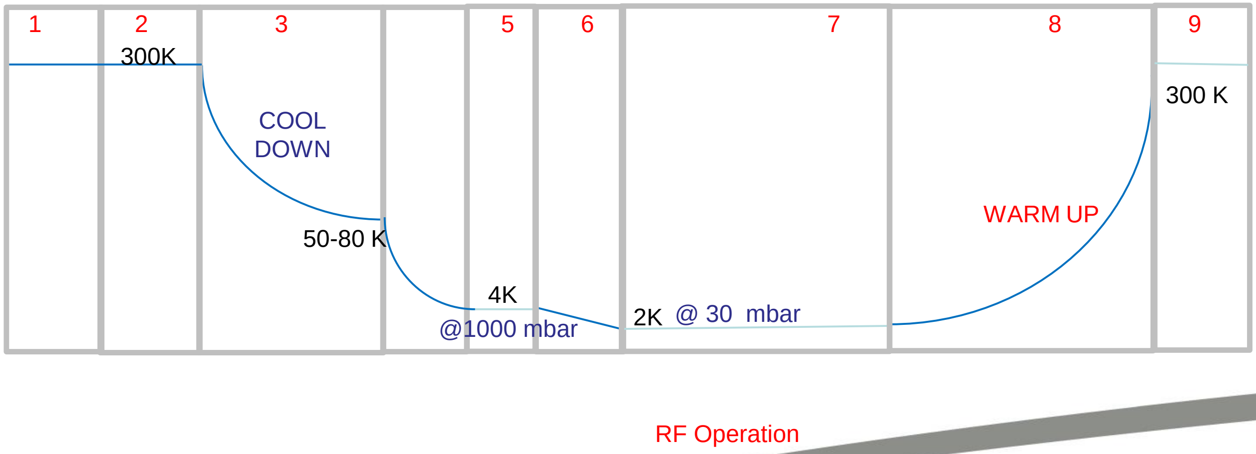

Cryogenic performance

Run-0 (Oct – Nov 2018)

Cooldown without installed cavities to validate baseline operation

Run-1 (Mar – Jun 2019)

Single prototype cavity (P02) cooled in middle cradle

Run-2 (Jul – Aug 2019)

P02 cooled in top cradle for radiation survey

Shield cooldown to 50 K

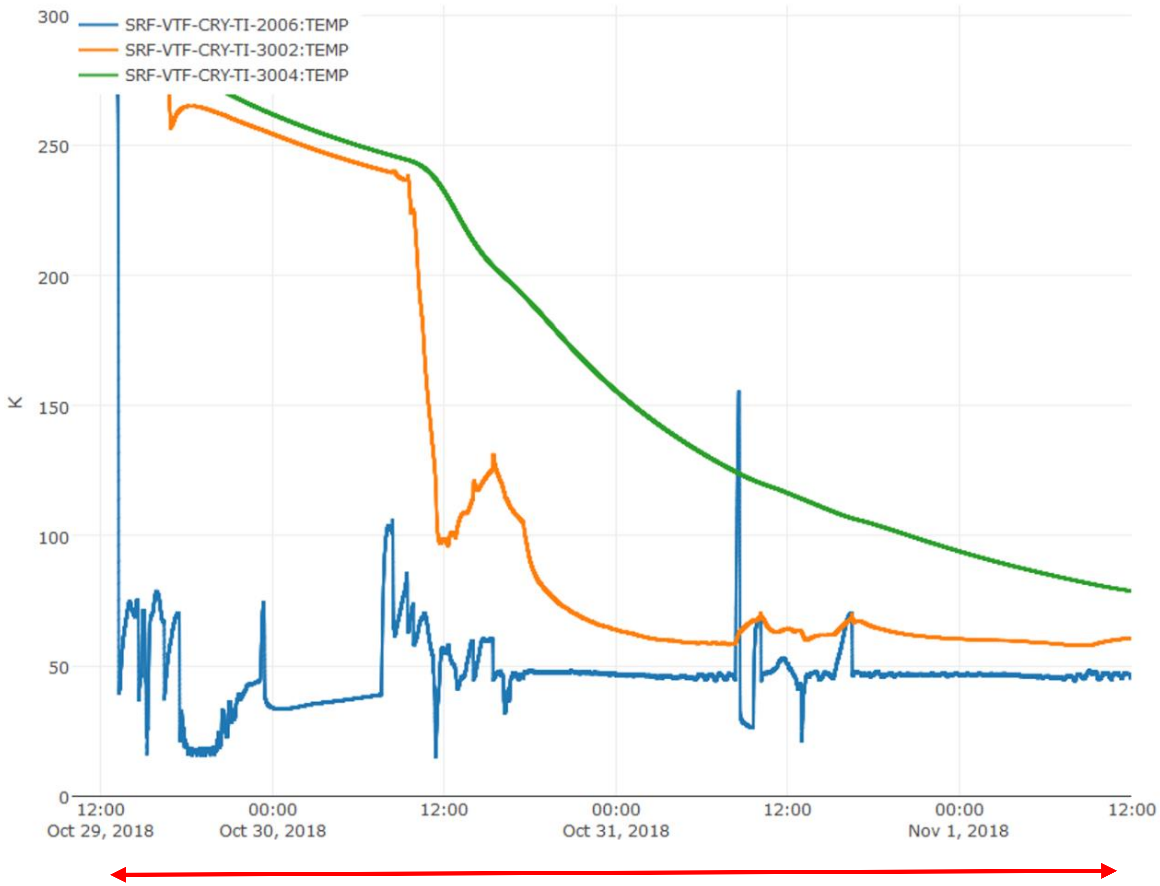

36 hours

Cavity cooldown to 4.2 K + fill

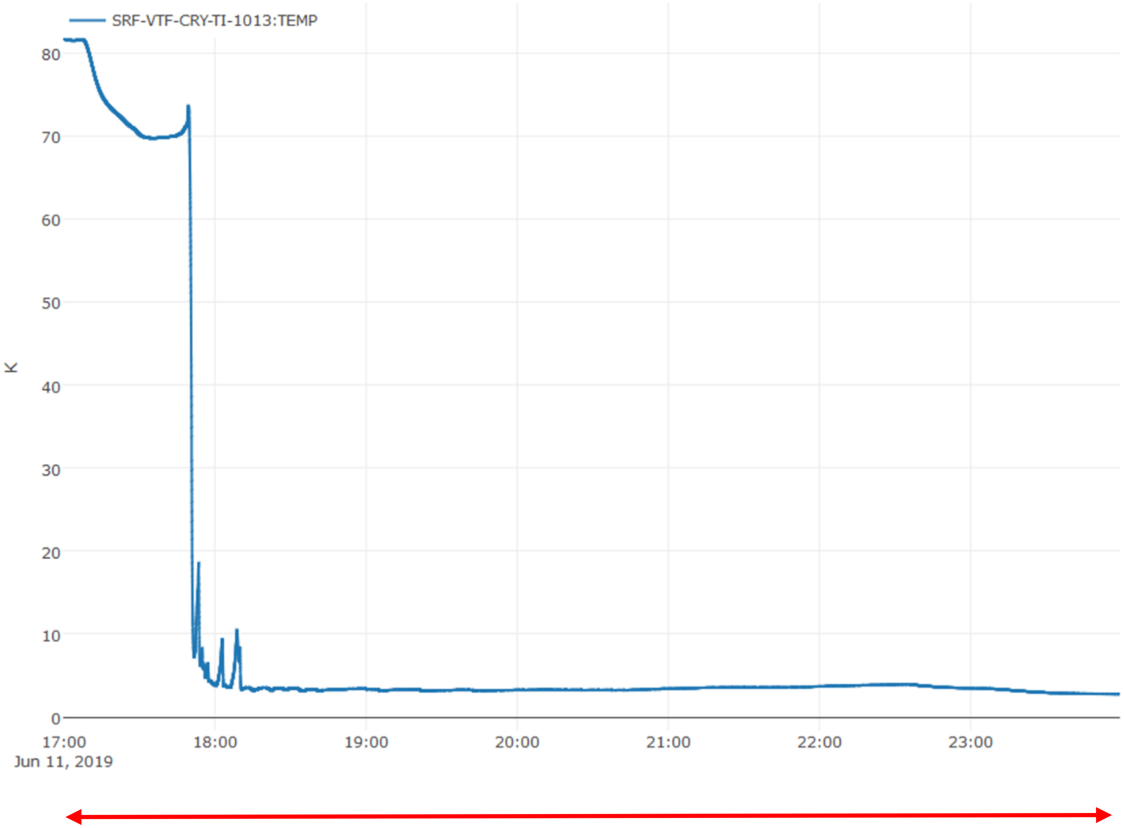

6 hours

Cavity cooldown to 2 K

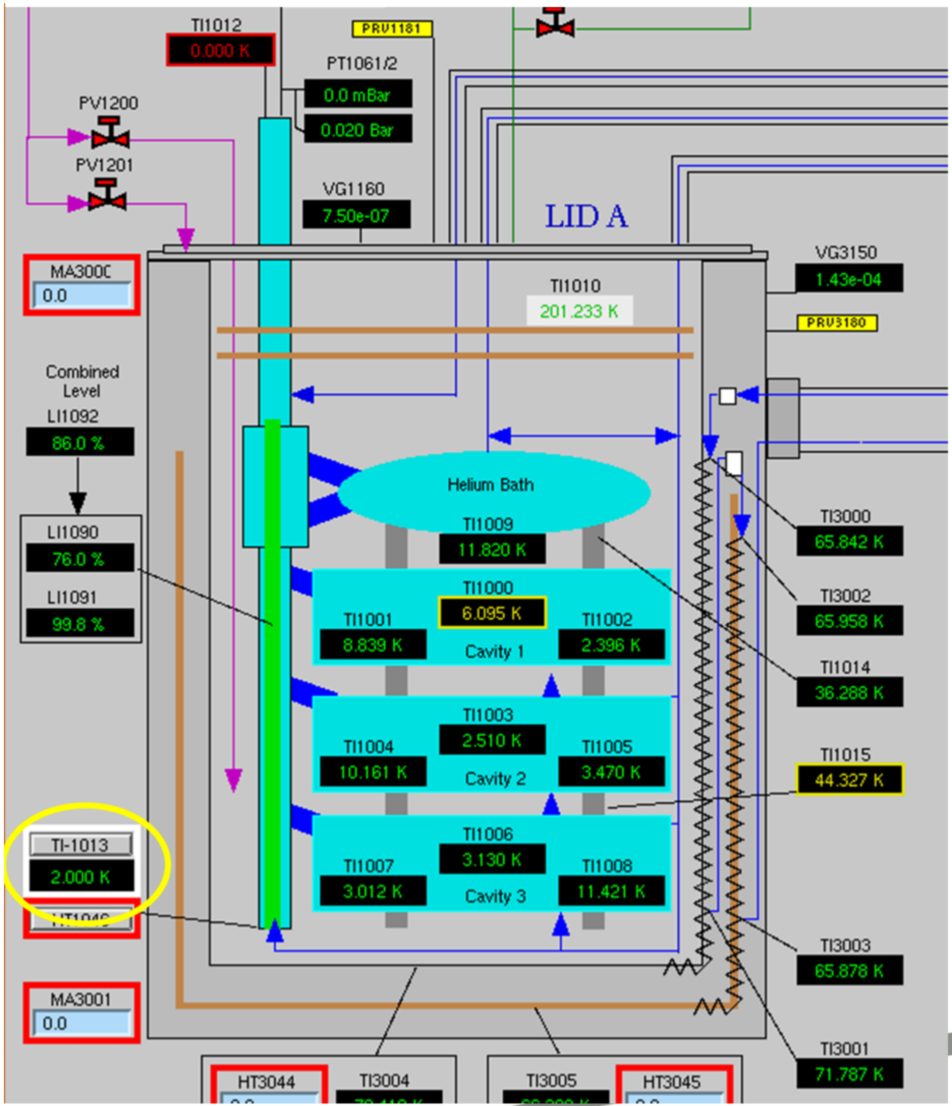

2 K pumps used to reduce pressure <30 mbar, cooling LHe through λ-point and <2 K

Pressure and temp stability

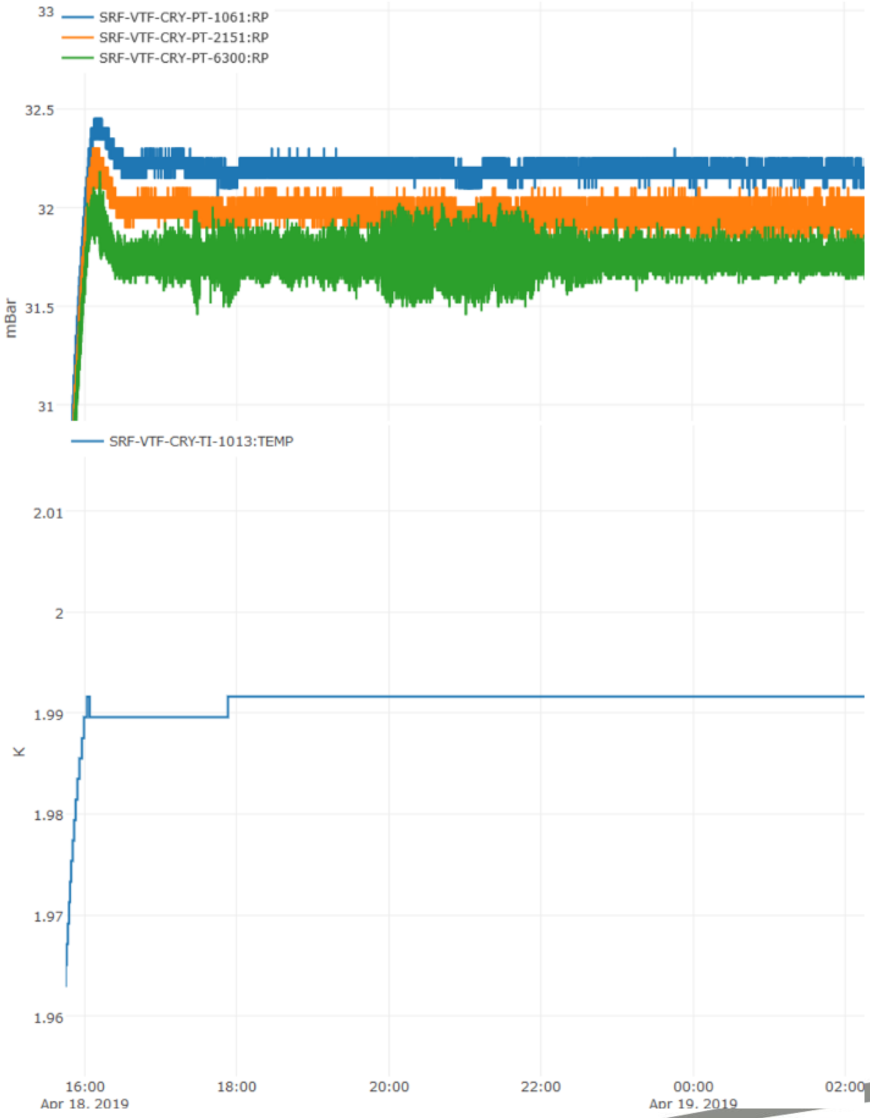

Excellent pressure and temperature stability under static load at 2 K with PID control of 2 K pumps

±0.1 mbar
±1 mK

Stability under dynamic load to be investigated in forthcoming run

Response to loading

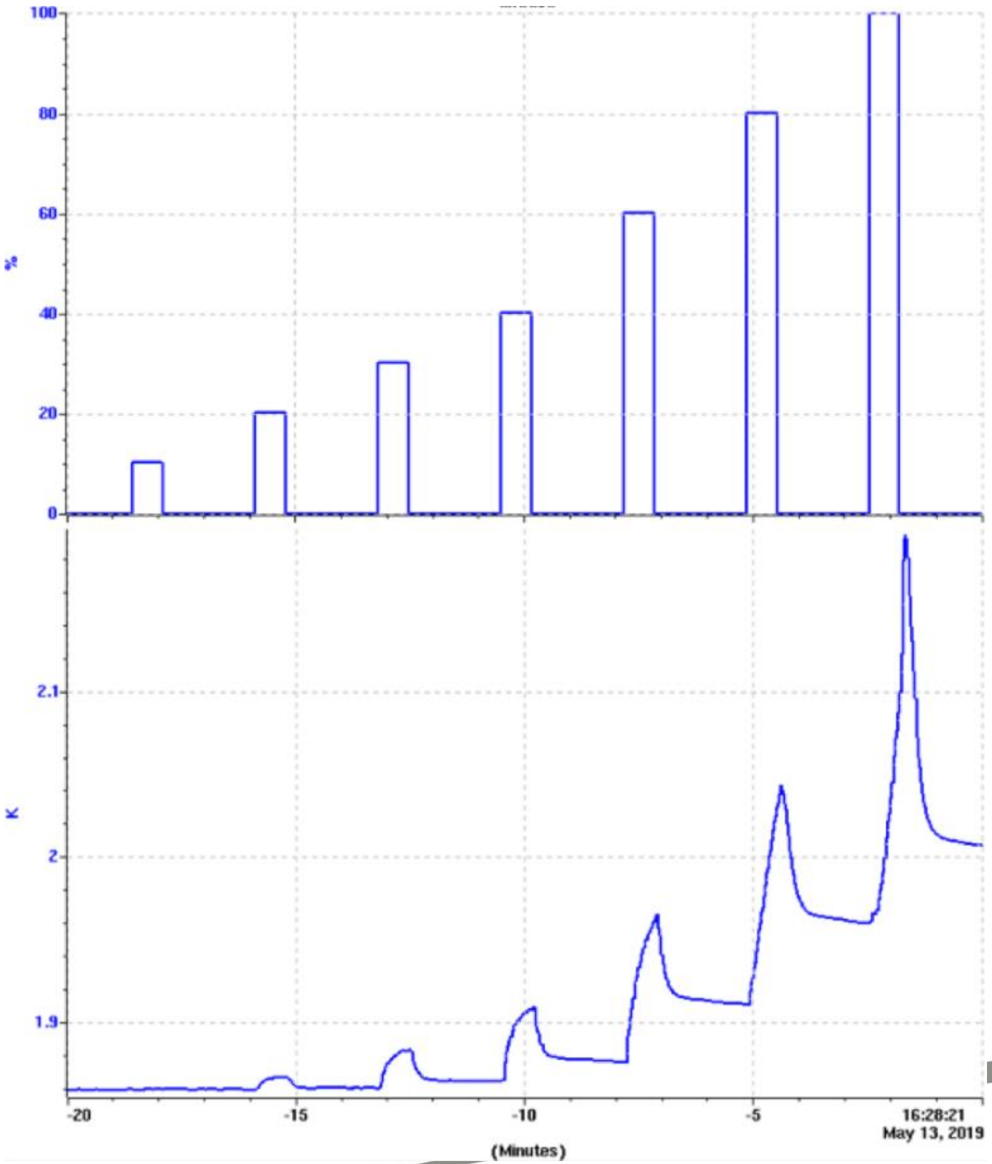

Preliminary tests carried out to simulate RF loading

Series of 40 s pulses applied up to 200 W

Cryo/RF ops at 2 K

Minimum liquid level to keep cavity immersed is 70%

With CSI filled to top of header tank (i.e. 100%), hold time at 2 K under static loading >18 hours

Actual duration available during testing will depend on RF power dissipated, expected to be ~8 hours

Top up duration ~2.5 hours; in practice fills carried out daily to support RF ops

Preliminary RF results

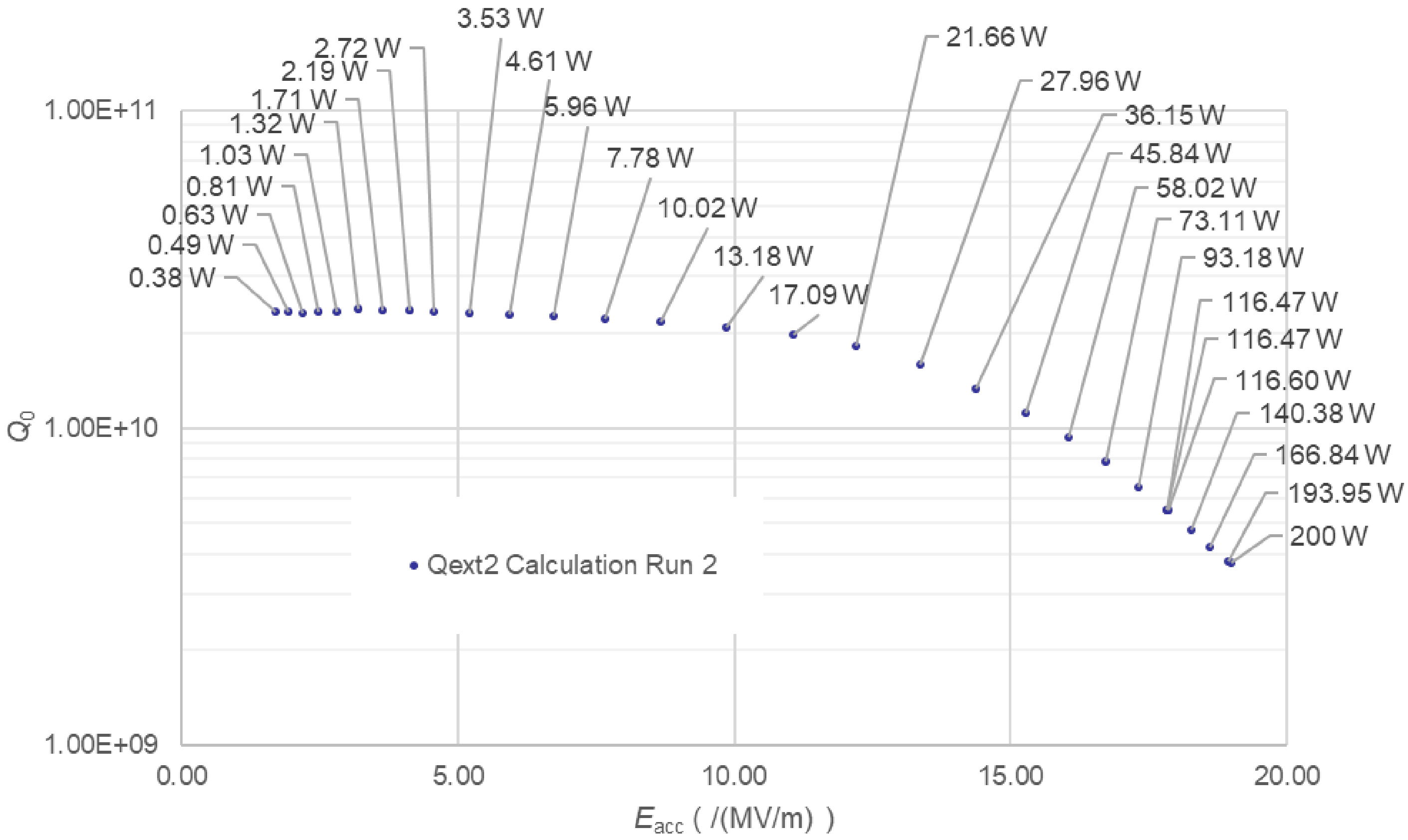

Agreement with CEA-Saclay data within experimental error

Preliminary RF results

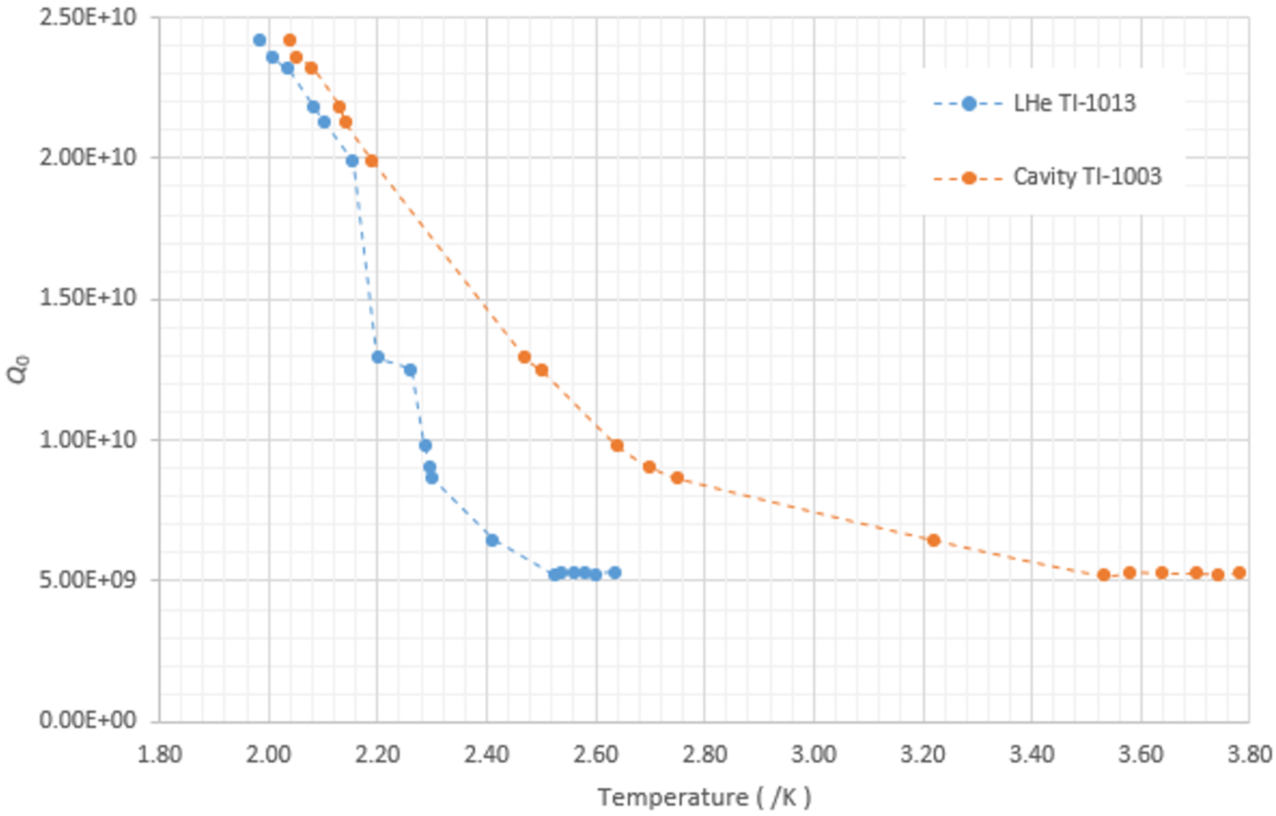

Pumps backed off and Q sampled whilst allowing temperature of liquid to rise slowly

Science & Technology Facilities Council

UK Research and Innovation

Warm up

Speedy warm up carried out by boiling off remaining LHe and employing recirculation pumps to drive warm GHe through cooling circuits

~72 hours for warm up to 300 K

Preliminary cryogenic performance appears consistent with plan to test 3 cavities / 2 weeks

Future plans

First series cavity scheduled for delivery Oct 2019

Currently in technical stop with Run-3 planned for Oct-Nov 2019 to begin validation of HPR on P02

Expected to start full test program next year

Summary

Novel VTF commissioned at STFC Daresbury allowing test of 3 cavities per run whilst requiring 70% less LHe than conventional facilities

Demonstrated first cavity cooldown to 2 K with excellent pressure/temperature stability

P02 RF tests at 2 K consistent with data from CEA Saclay

Preliminary cryogenic performance appears consistent with planned test of 3 cavities / 2 weeks

Acknowledgements

The SuRF Lab Team would like to thank ASTeC management, collaborators from ESS, CEA, and INFN, as well as industrial partners

Thanks for your attention!

Any questions?

andrew.may@stfc.ac.uk

Backup slides

Safety

Significant efforts have been devoted to safety considerations during design

Worst-case failure scenarios considered to be:

- cryostat vacuum failure
- beam pipe vacuum failure
- contamination of helium circuit

Safety – cryostat vaccum failure

Cryostat vacuum loss → immediate leak of 300 K air onto cold surfaces

MLI on cavity jackets retards heat transfer from warm gas

	Loss of vacuum heat load	Ø safety valve required
Without MLI on cavities	170 kW	64 mm
With MLI on cavities	42 kW	32 mm

Safety – beam pipe vacuum failure

Immediate leak of 300 K air onto inside surface of cavity

3 independent UHV lines → extremely unlikely all three would fail simultaneously

Loading found to be lower than for previous case, hence not limiting scenario

Safety – contamination of helium circuit

If PRV does not close properly following He boil off from transient event, air ingress possible

In order to mitigate this, low pressure helium guard around PRV used

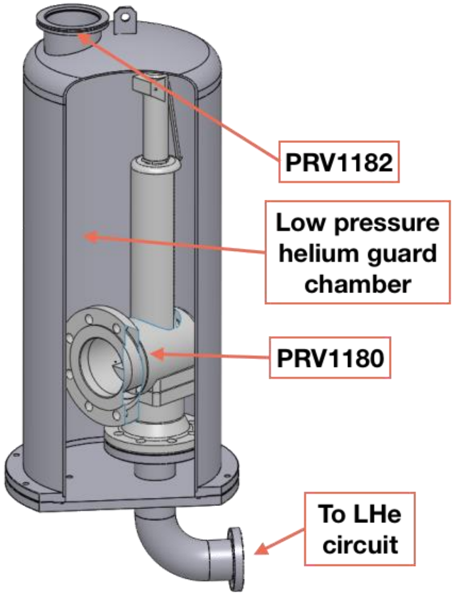

UHV system

Custom slow pump-slow vent systems developed to operate cavities down to 10^{-7} mbar

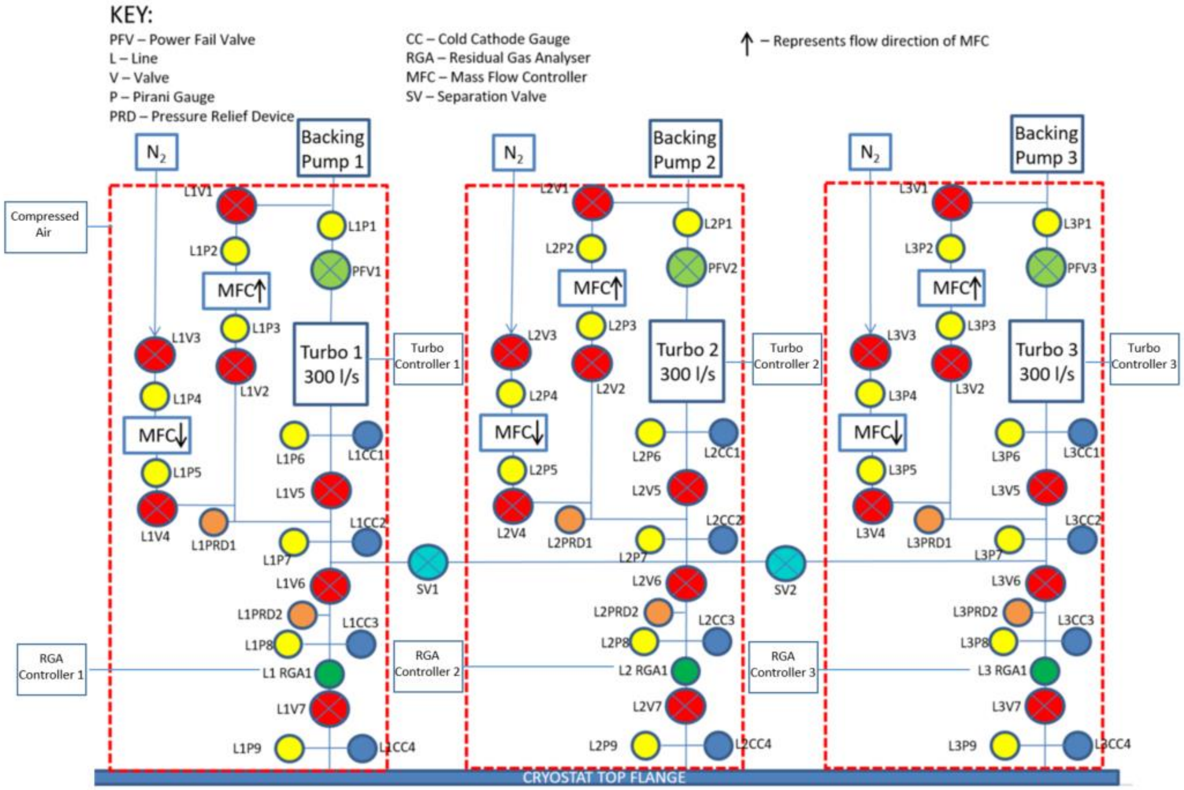

KEY:
PFV – Power Fail Valve
L – Line
V – Valve
P – Pirani Gauge
PRD – Pressure Relief Device

CC – Cold Cathode Gauge
RGA – Residual Gas Analyser
MFC – Mass Flow Controller
SV – Separation Valve

↑ – Represents flow direction of MFC

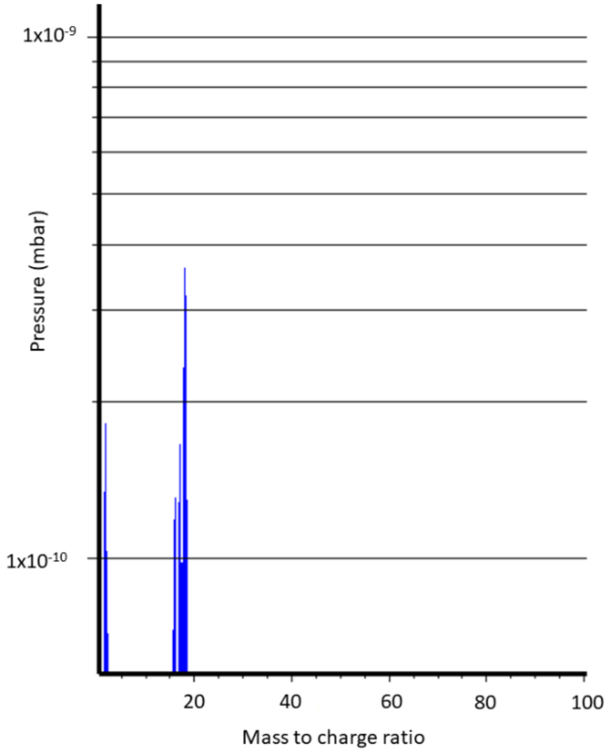

Science & Technology Facilities Council

UK Research and Innovation