EUROPEAN
SPALLATION
SOURCE

ESS Breakdown Structures

Joakim Meyer
Project Leader
Engineering and Integration Support Division

www.europeanspallationsource.se
18th of Februray 2016

Engineering Integration and Support Division

- The EIS division defines the central engineering function with a responsibility to provide relevant technical services, activities and expertise to the ESS Programme and is responsible for leading and implementation of ESS Project Information Management.

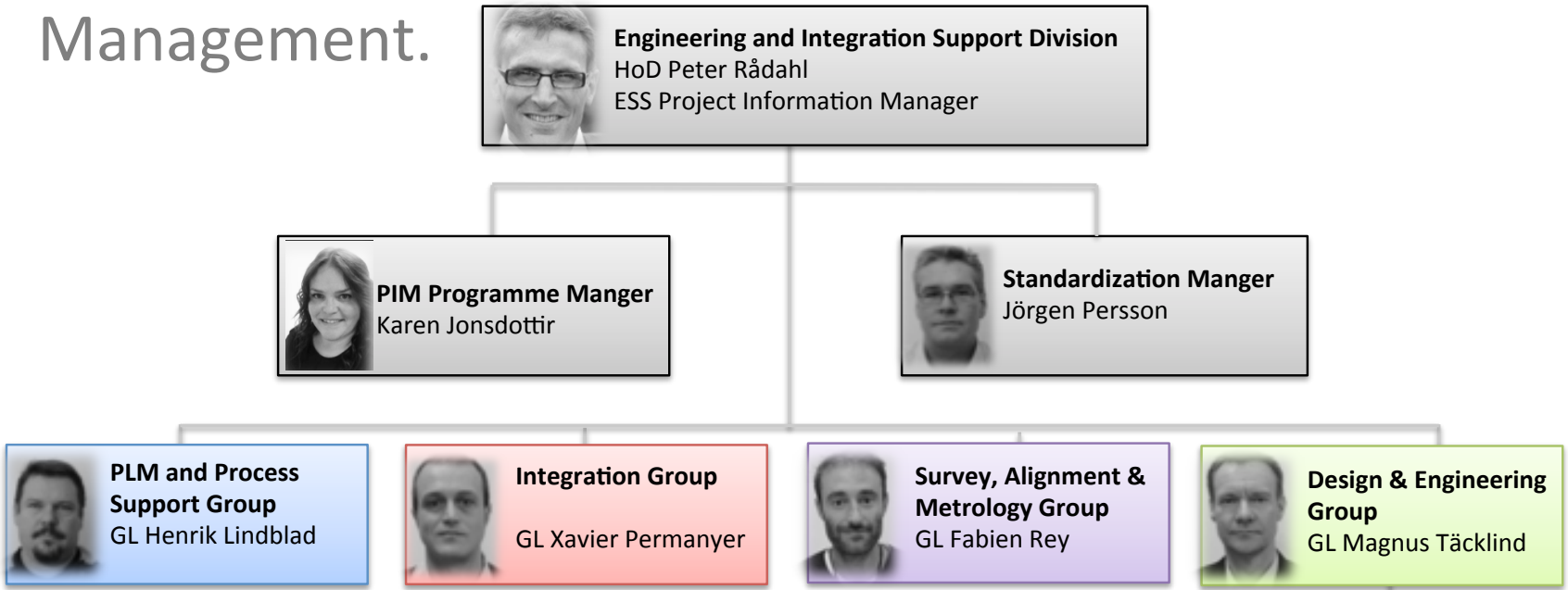

Project Information Management (PIM)

EUROPEAN SPALLATION SOURCE

- **Project Information Management (PIM)** addresses the needs of organizing, finding, tracking, sharing, monitoring and reusing technical project information and communications in a way that allows complete traceability of the whole ESS Programme over its lifecycle.
- **The Project Information Management System (PIMS)** is based on PLM and design/support software, and on methodical processes for collecting and using project information. These are by definition the ESS standard and official tools and processes.

ESS Breakdown Structures

- **Facility Breakdown Structure (FBS).**
  Is a breakdown of the facility (Plant) into systems and subsystems that uniquely identifies the function and its requirements in the ESS Facility.
- **Location Breakdown Structure (LBS).**
  Is a breakdown of the physical location. It can contain one or more functions from the Facility Breakdown Structure.
- **Engineering Bill Of Material (EBOM).**
  Reflecting the product as designed by engineering, referred to as the "as-designed" bill of materials connected to the leaf of the FBS.
- **Standard components library.**
  Components being approved as standards by the discipline working groups across ESS. The library support both components and modules of components.
- **Physical installed Structure.**
  Structures the documentation of the physical components.

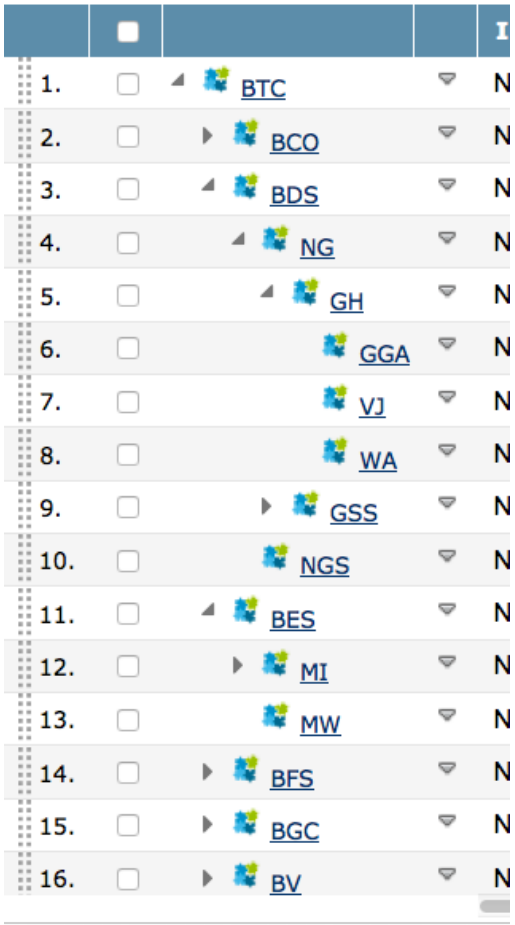

ESS Breakdown Structures –
What type of information go into which structure

- **Facility Breakdown Structure (FBS).**
  Process & Flow Diagrams (PFD), Piping & Instrumentation Diagrams (P&ID), electrical diagrams, consolidated 2D & 3D information from plant design, maintenance and operation instructions.
- **Location Breakdown Structure (LBS).**
  Non-tag facility information. E.g. documentation from civil & structural, for instance BoQ's, models and drawings.
- **Engineering Bill Of Material (EBOM).**
  Part structure with product design drawings and CAD models, generic documentation.
- **Standard Components Library.**
  Much information is the same as on EBOM but these are the preferred components to use, often consolidated into one part instead of a EBOM.
- **Physical installed Structure.**
  Certificates, vendor & product documentation, product operational/maintenance manual.

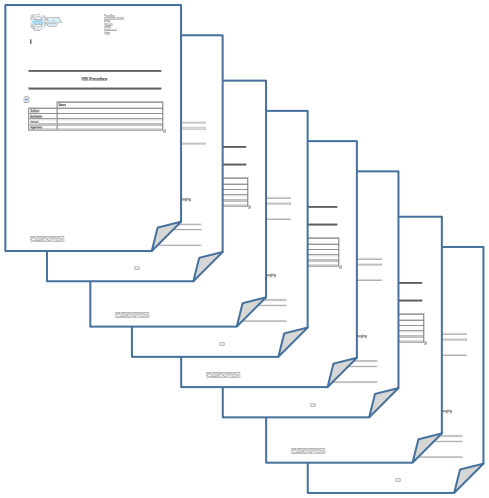

Facility Breakdown Structure

	In work	Tag	Description
LOKI	No	=ESS.INS.LOKI	LoKi
BTC	No	=ESS.INS.LOKI.BTC	Beam Transport and Conditioning System
BCO	No	=ESS.INS.LOKI.BTC.BCO	Beam Cut Off
BDS	No	=ESS.INS.LOKI.BTC.BDS	Beam Delivery System
BES	No	=ESS.INS.LOKI.BTC.BES	Beam Extraction System
BFS	No	=ESS.INS.LOKI.BTC.BFS	Beam Filtering System
BGC	No	=ESS.INS.LOKI.BTC.BGC	Beam Geometry Conditioning
APC	No	=ESS.INS.LOKI.BTC.BGC.APC	Aperture Collimation System
AP001	No	=ESS.INS.LOKI.BTC.BGC.APC.AP001	Aperture Package 1
AB	No	=ESS.INS.LOKI.BTC.BGC.APC.AP001.AB	Absorber
AV	No	=ESS.INS.LOKI.BTC.BGC.APC.AP001.AV	Aperture Vessel
ME	No	=ESS.INS.LOKI.BTC.BGC.APC.AP001.ME	Mechanics
AP002	No	=ESS.INS.LOKI.BTC.BGC.APC.AP002	Aperture Package 2
AP003	No	=ESS.INS.LOKI.BTC.BGC	

By browsing through the FBS we are able to locate the LoKI instrument.

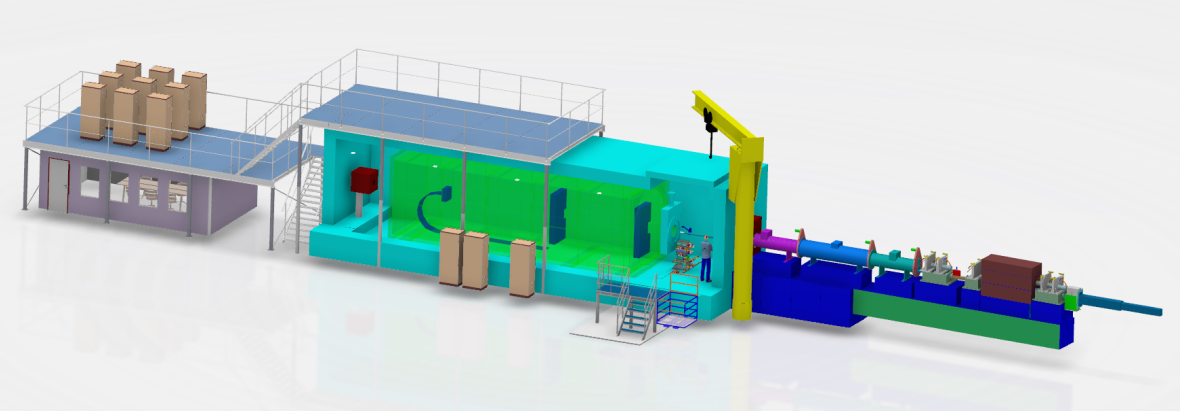

Facility Breakdown Structure

	In work	Tag	Description
LOKI	No	=ESS.INS.LOKI	LoKi
BTC	No	=ESS.INS.LOKI.BTC	Beam Transport and Conditioning System
BCO	No	=ESS.INS.LOKI.BTC.BCO	Beam Cut Off
BDS	No	=ESS.INS.LOKI.BTC.BDS	Beam Delivery System
BES	No	=ESS.INS.LOKI.BTC.BES	Beam Extraction System
BFS	No	=ESS.INS.LOKI.BTC.BFS	Beam Filtering System
BGC	No	=ESS.INS.LOKI.BTC.BGC	Beam Geometry Conditioning
APC	No	=ESS.INS.LOKI.BTC.BGC.APC	Aperture Collimation System
AP001	No	=ESS.INS.LOKI.BTC.BGC.APC.AP001	Aperture Package 1
AB	No	=ESS.INS.LOKI.BTC.BGC.APC.AP001.AB	Absorber
AV	No	=ESS.INS.LOKI.BTC.BGC.APC.AP001.AV	Aperture Vessel
ME	No	=ESS.INS.LOKI.BTC.BGC.APC.AP001.ME	Mechanics
AP002	No	=ESS.INS.LOKI.BTC.BGC.APC.AP002	Aperture Package 2
AP003	No	=ESS.INS.LOKI.BTC.BGC.APC.AP003	Aperture Package 3

Here you will be able to find all information regarding the instance, e.g. manuals, specifications and requirements.

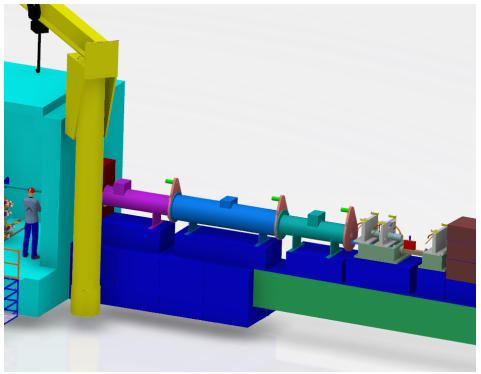

Facility Breakdown Structure

EUROPEAN SPALLATION SOURCE

LBS

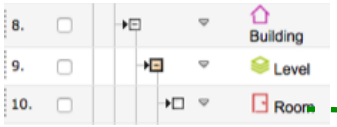

	In work	Tag	Description
LOKI	No	=ESS.INS.LOKI	LoKi
BTC	No	=ESS.INS.LOKI.BTC	Beam Transport and Conditioning System
BCO	No	=ESS.INS.LOKI.BTC.BCO	Beam Cut Off
BDS	No	=ESS.INS.LOKI.BTC.BDS	Beam Delivery System
BES	No	=ESS.INS.LOKI.BTC.BES	Beam Extraction System
BFS	No	=ESS.INS.LOKI.BTC.BFS	Beam Filtering System
BGC	No	=ESS.INS.LOKI.BTC.BGC	Beam Geometry Conditioning
APC	No	=ESS.INS.LOKI.BTC.BGC.APC	Aperture Collimation System
AP001	No	=ESS.INS.LOKI.BTC.BGC.APC.AP001	Aperture Package 1
AB	No	=ESS.INS.LOKI.BTC.BGC.APC.AP001.AB	Absorber
AV	No	=ESS.INS.LOKI.BTC.BGC.APC.AP001.AV	Aperture Vessel
ME	No	=ESS.INS.LOKI.BTC.BGC.APC.AP001.ME	Mechanics
AP002	No	=ESS.INS.LOKI.BTC.BGC.APC.AP002	Aperture Package 2
AP003	No	=ESS.INS.LOKI.BTC.BGC.APC.AP003	Aperture Package 3

EBOM

In the breakdown for the LoKI instrument you are able to go to the generic design, the EBOM, or to locate where its been installed, the LBS.

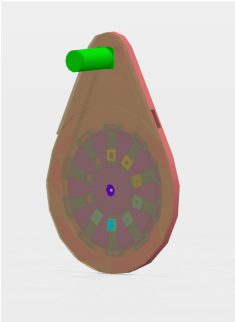

Location Breakdown Structure

1.	Site		
2.	Area	A	Entire site
3.	Area	B	Campus Area
4.	Area	C	Experimental Halls South
5.	Area	D	Target buildings
6.	Building	D01	Experimental Hall 1
7.	Building	D02	Target Building
8.	Building	D03	Experimental Hall 2
9.	Level	100	Ground level (entrance floor)
10.	Room	1001	Experimental Hall 2
11.	Room	2001	Experimental Hall 2
12.	Room	2002	Bunker area Northwest
13.	Room	2003	Bunker area North
14.	Level	110	1 levels above ground level
15.	Building	D04	Lab. 2, Exp. Hall 2
16.	Building	D05	Substation

From the LoKI instrument we are able to go to the location where it is installed.

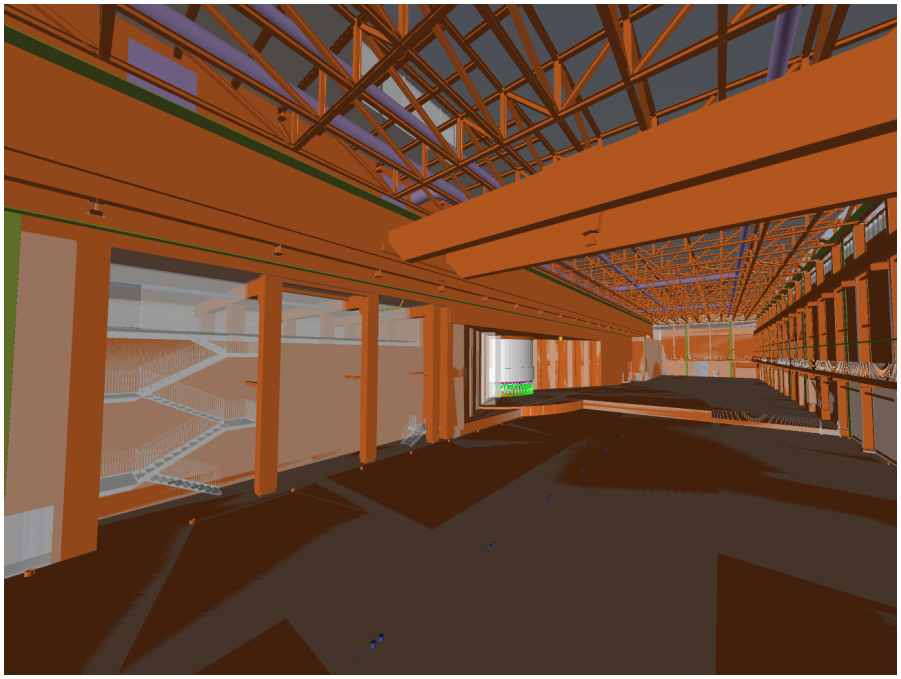

Location Breakdown Structure

1.	Site		
2.	Area	A	Entire site
3.	Area	B	Campus Area
4.	Area	C	Experimental Halls South
5.	Area	D	Target buildings
6.	Building	D01	Experimental Hall 1
7.	Building	D02	Target Building
8.	Building	D03	Experimental Hall 2
9.	Level	100	Ground level (entrance floor)
10.	Room	1001	Experimental Hall 2
11.	Room	2001	Experimental Hall 2
12.	Room	2002	Bunker area Northwest
13.	Room	2003	Bunker area North
14.	Level	110	1 levels above ground level
15.	Building	D04	Lab. 2, Exp. Hall 2
16.	Building	D05	Substation

Here you are able to find information about the location....

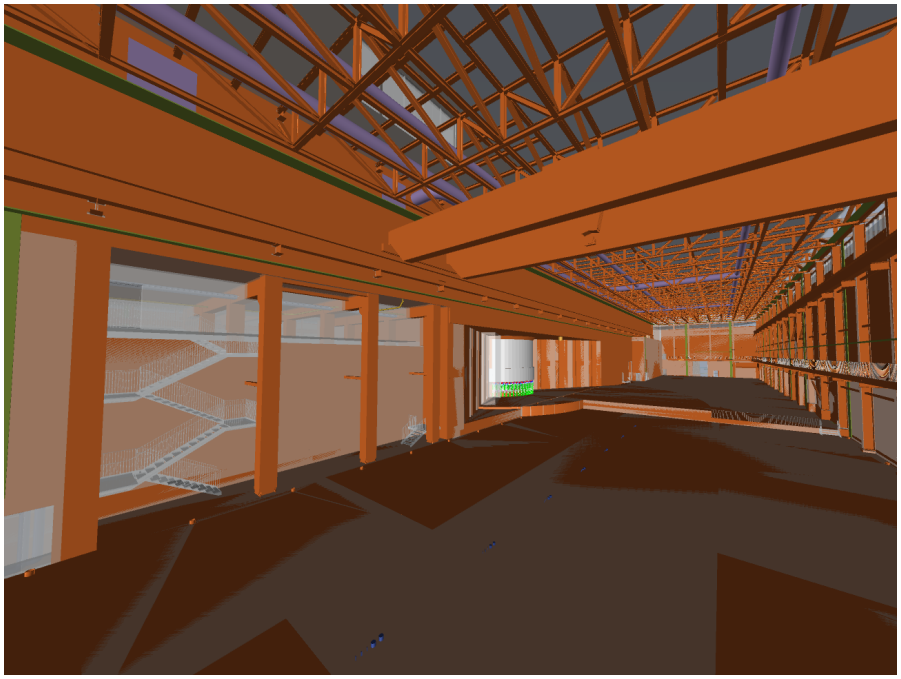

Location Breakdown Structure

1.	Site		
2.	Area	A	Entire site
3.	Area	B	Campus Area
4.	Area	C	Experimental Halls South
5.	Area	D	Target buildings
6.	Building	D01	Experimental Hall 1
7.	Building	D02	Target Building
8.	Building	D03	Experimental Hall 2
9.	Level	100	Ground level (entrance floor)
10.	Room	1001	Experimental Hall 2
11.	Room	2001	Experimental Hall 2
12.	Room	2002	Bunker area Northwest
13.	Room	2003	Bunker area North
14.	Level	110	1 levels above ground level
15.	Building	D04	Lab. 2, Exp. Hall 2
16.	Building	D05	Substation

…and see what tags / functions can be found in this location, besides the LoKI instrument.

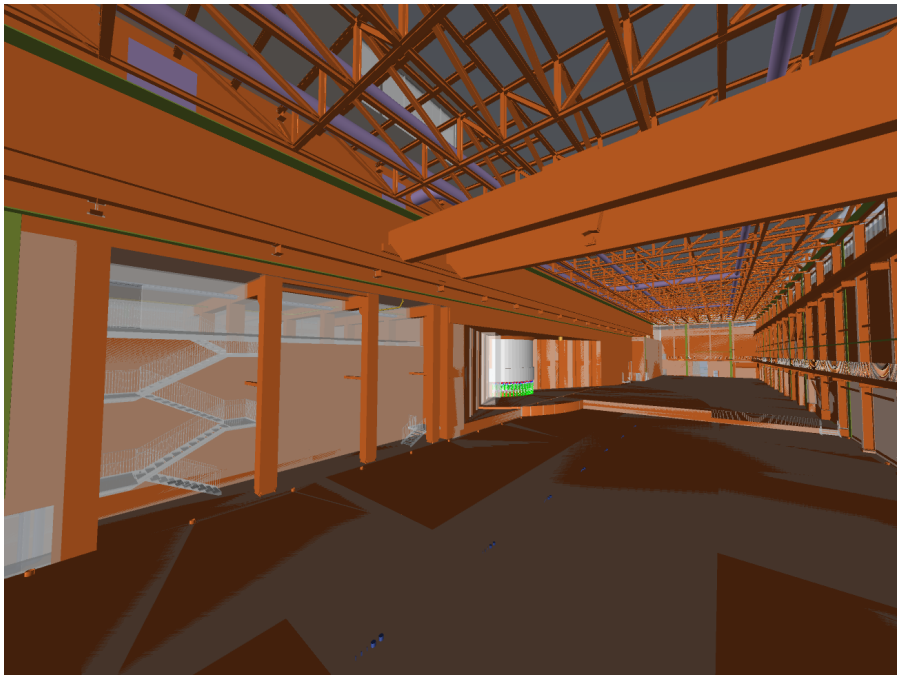

Engineering Bill Of Material

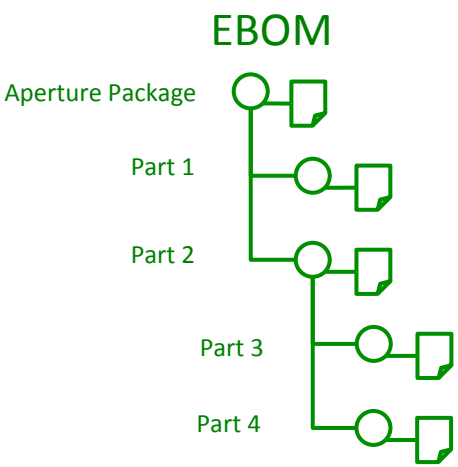

From the FBS we can instead of the LBS go to the EBOM where we find the generic information about the design and, if we have it, go to the CAD design.

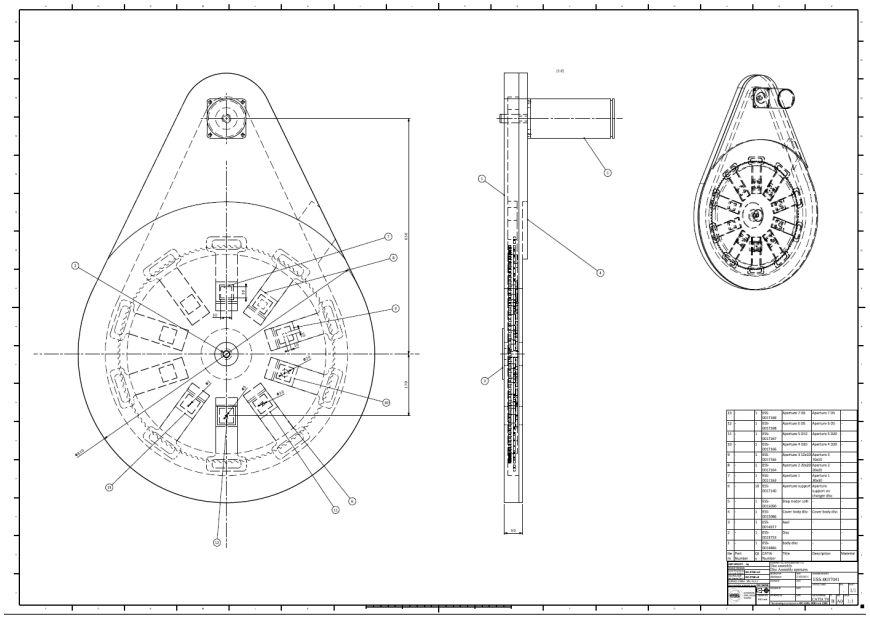

Rule of thumb for the breakdowns

Rule of thumb for the breakdowns?

EUROPEAN SPALLATION SOURCE

- How should we do the breakdown:
  - A system breakdown according to the function of the systems, subsystems and sub subsystems.
  - Aim for cohesion and lower levels of interface management.
  - Keep the interfaces as local as possible and reduce the number of external interfaces.
- How deep should the breakdown be:
  - To the last maintained or replaceable part from an operation, safety, regulatory and maintenance perspective.
  - Decision on how deep is decided by each project.
  - The breakdowns will evolve over time.

EUROPEAN SPALLATION SOURCE

How and when should we use the Structures?

How and when should we use the Structures?

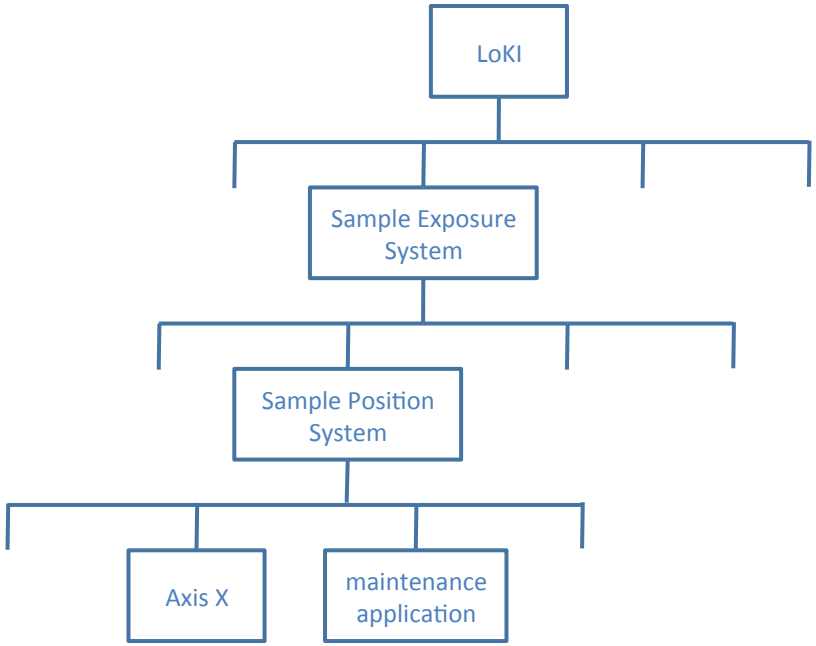

- Identify systems, sub systems and sub subsystems.

How and when should we use the Structures?

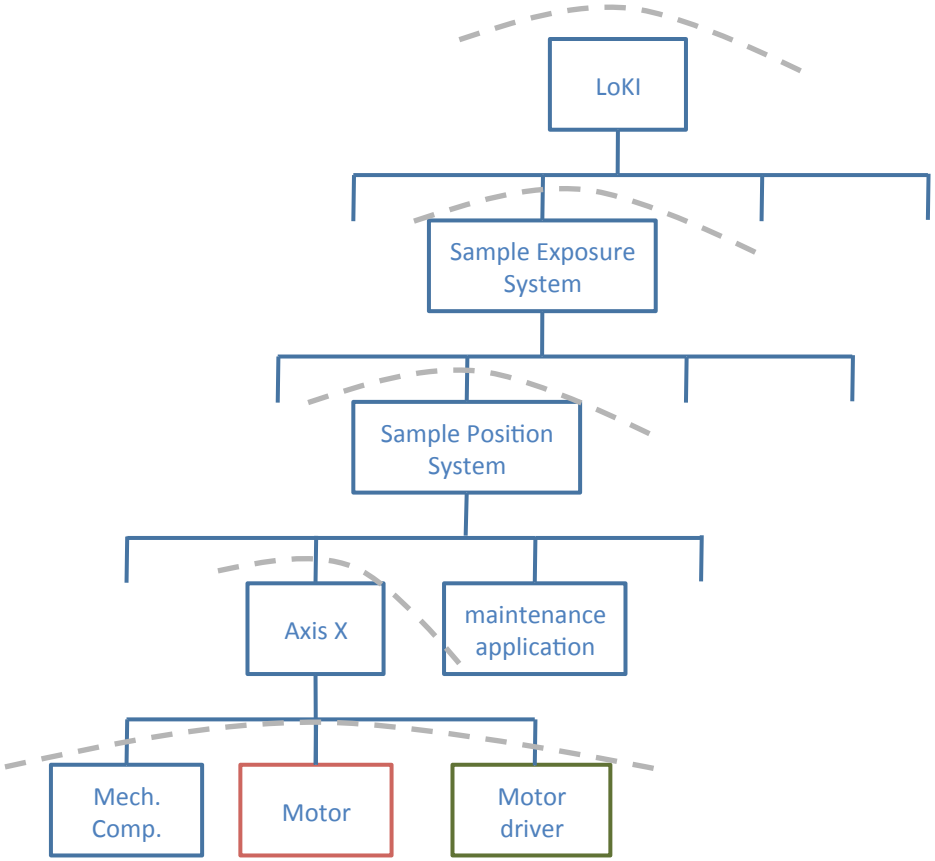

- Identify sub systems.
- Visibility.

How and when should we use the Structures?

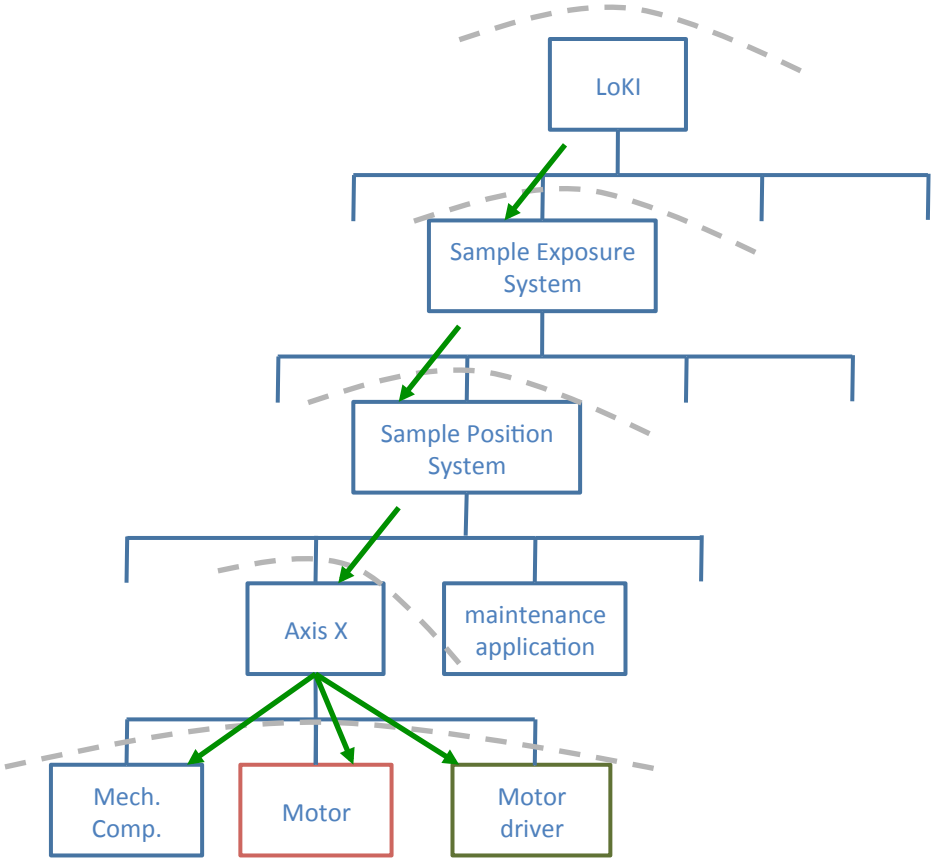

- Identify sub systems.
- Visibility
- Requirements breakdown

How and when should we use the Structures?

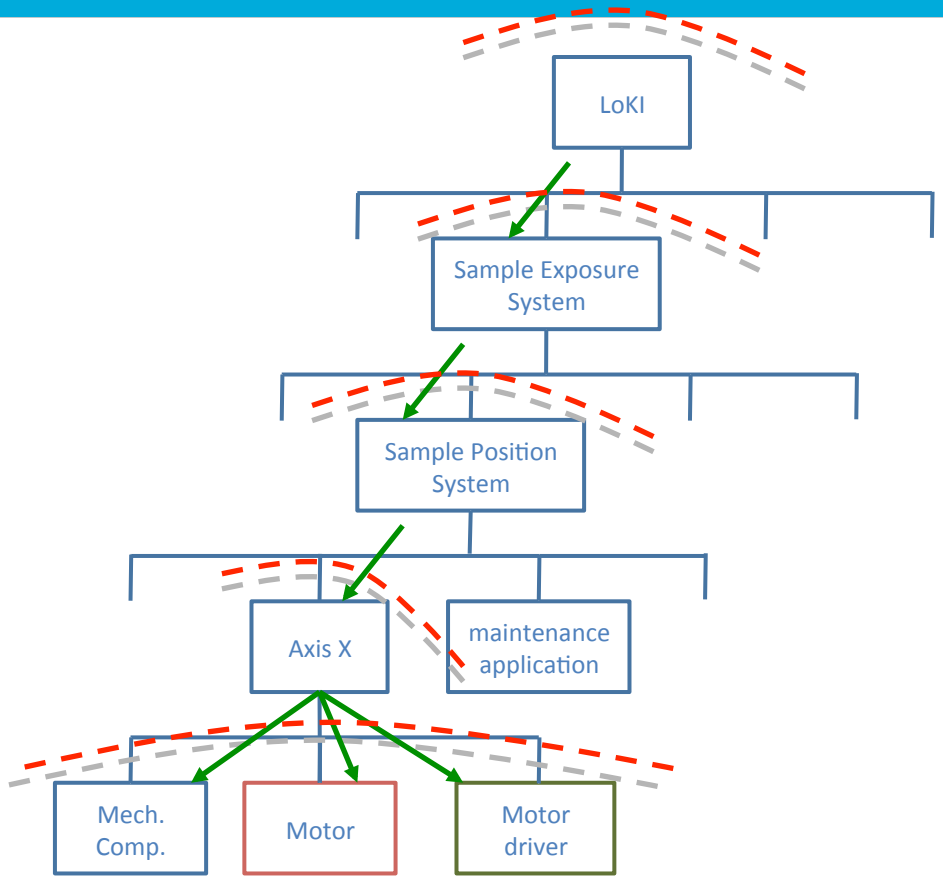

- Identify sub systems.
- Visibility.
- Requirements breakdown.
- Integration.
- Verification & Validation.

How and when should we use the Structures?

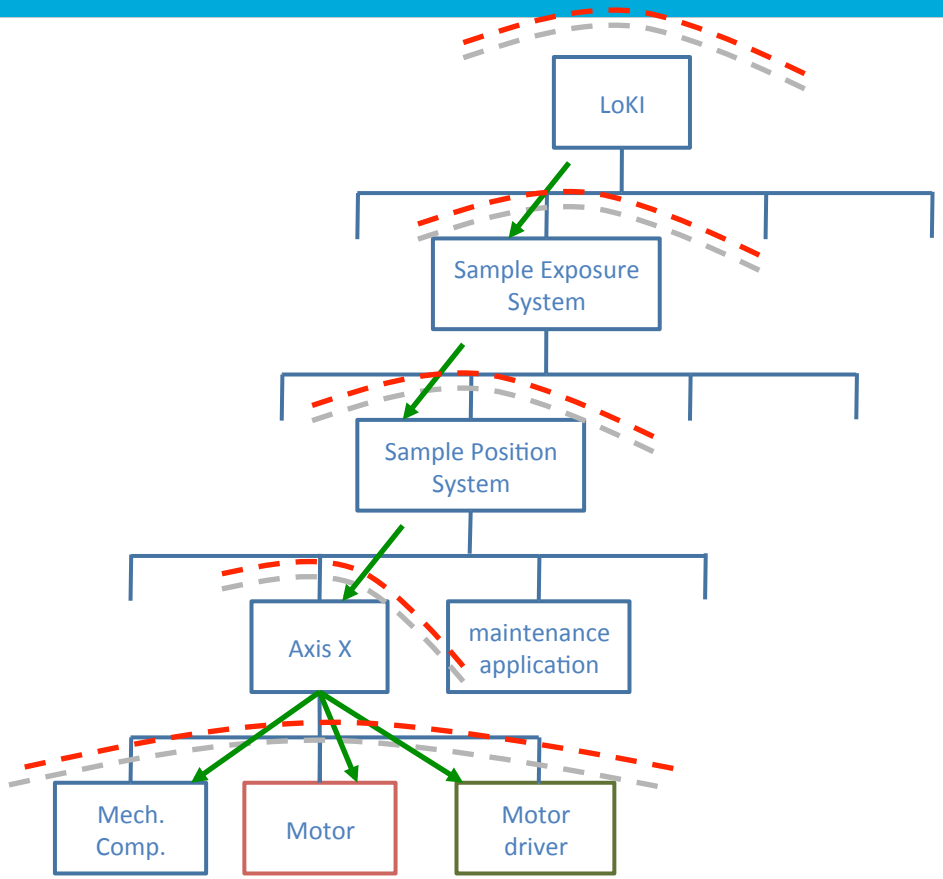

Other benefits

- Clarify meaning and communication.
- Tools support for the trouble shooting, e.g. when we need to maintain a part of the facility, what impact does it have or when an alarm goes off it simplifies to see what it affects.
- It is also a support to integration planning and support the Project management (schedule and resource needs)
- Reliability and availability planning.

How and when should we use the Structures?

- Design
  Create and update the structures and add relevant information to the nodes.
  Find and consume information of objects/function or location.
- Installation, Test, Verification and Commissioning.
  Consume information about e.g. installation instructions.
  Update and add information to the created structures, e.g. test plans and reports.
- Operation
  Consume information for maintenance and operation.
  Update information when changes made to the location/function/design.

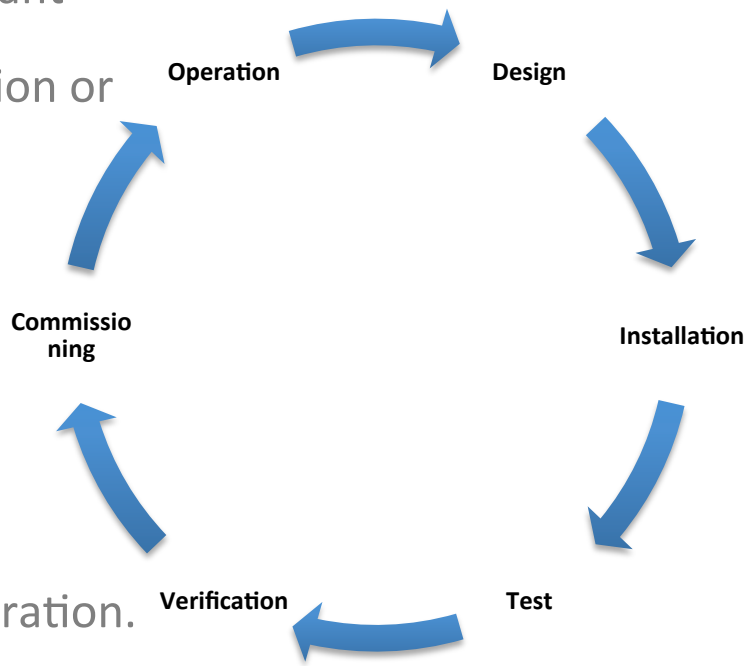

ESS Breakdown Structures

EUROPEAN SPALLATION SOURCE

Contact information:

EIS PLM processes & support:

Henrik Lindblad, henrik.lindblad@esss.se

This presentation:

Joakim Meyer, joakim.meyer@esss.se

Thank you!