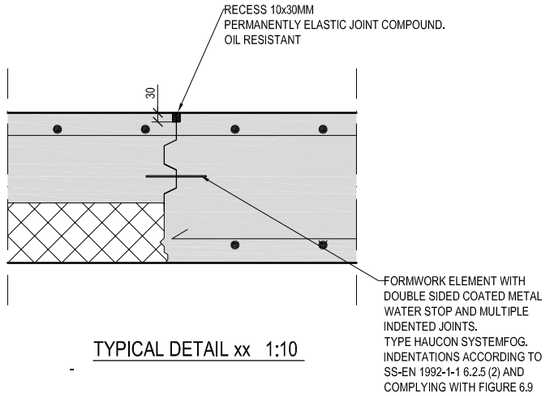

TYPICAL DETAIL xx 1:10

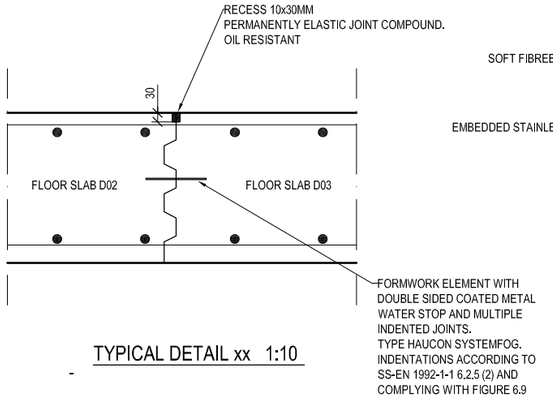

TYPICAL DETAIL xx 1:10

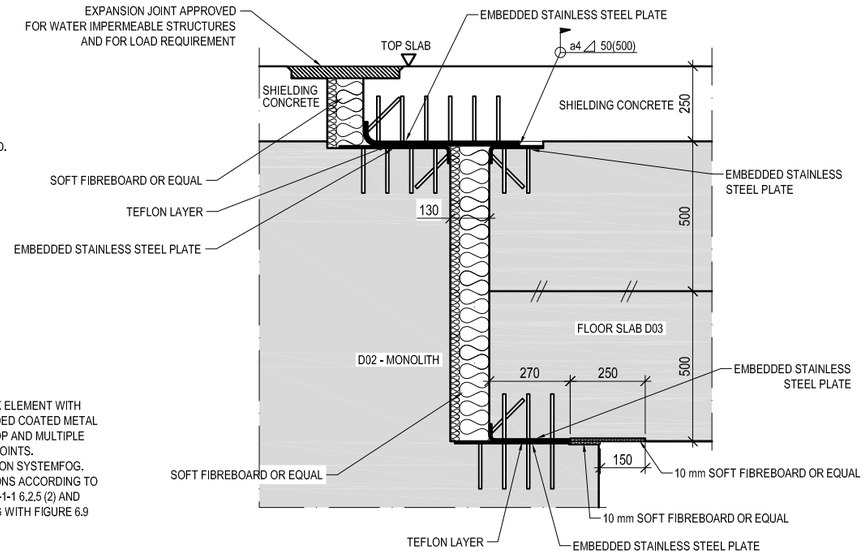

TYPICAL DETAIL xx 1:10
EXPANSION JOINT SLAB

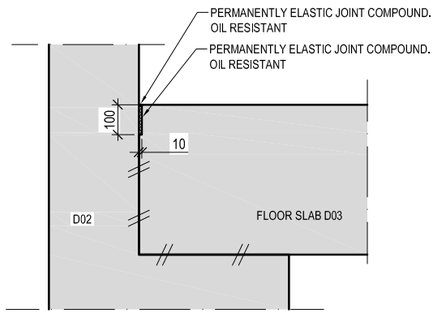

TYPICAL DETAIL xx 1:10

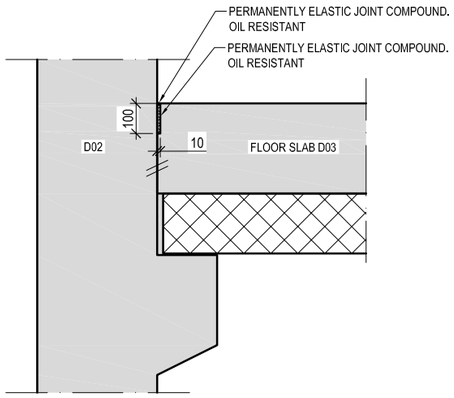

TYPICAL DETAIL xx 1:10

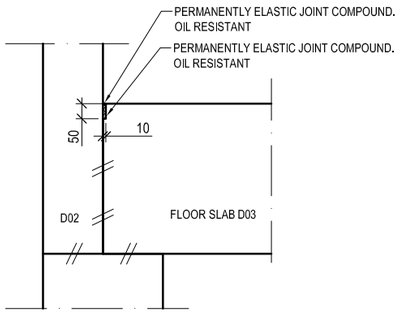

TYPICAL DETAIL xx 1:10

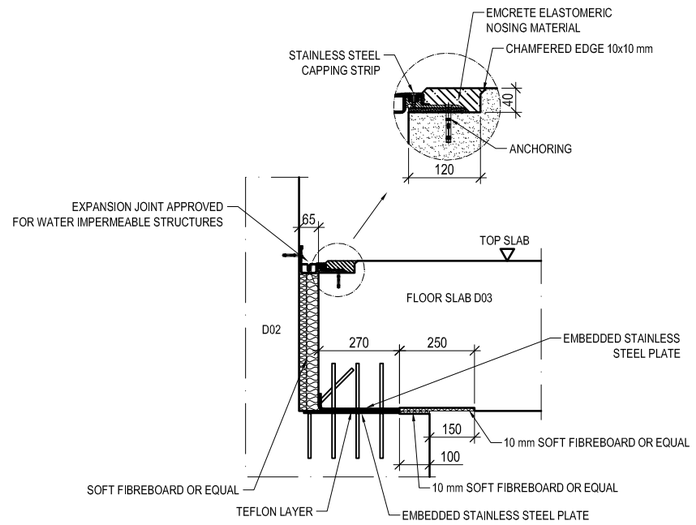

TYPICAL DETAIL xx 1:10
EXPANSION JOINT

REV	REVISION TYPE	DATE	SIGN

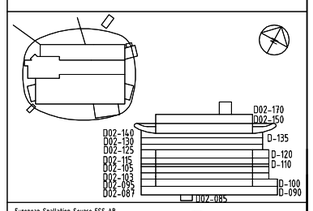

European Spallation Source ESS AB
ESS, Tunnvägen 24
P.O. Box 176
SE-221 00 Lund
SWEDEN
www.esss.se

EUROPEAN SPALLATION SOURCE

DESIGN COORDINATOR | DESIGN MANAGER

CONSULTANT		PROJECT NUMBER
DRAWN BY	MANAGED BY	CHECKED BY
DATE	APPROVED BY	

D03 EXPERIMENTAL HALL 2

SCALE
A1
A3

DRAWING NUMBER
DETAILS D03

REV